ROCKFORD SYSTEMS, LLC

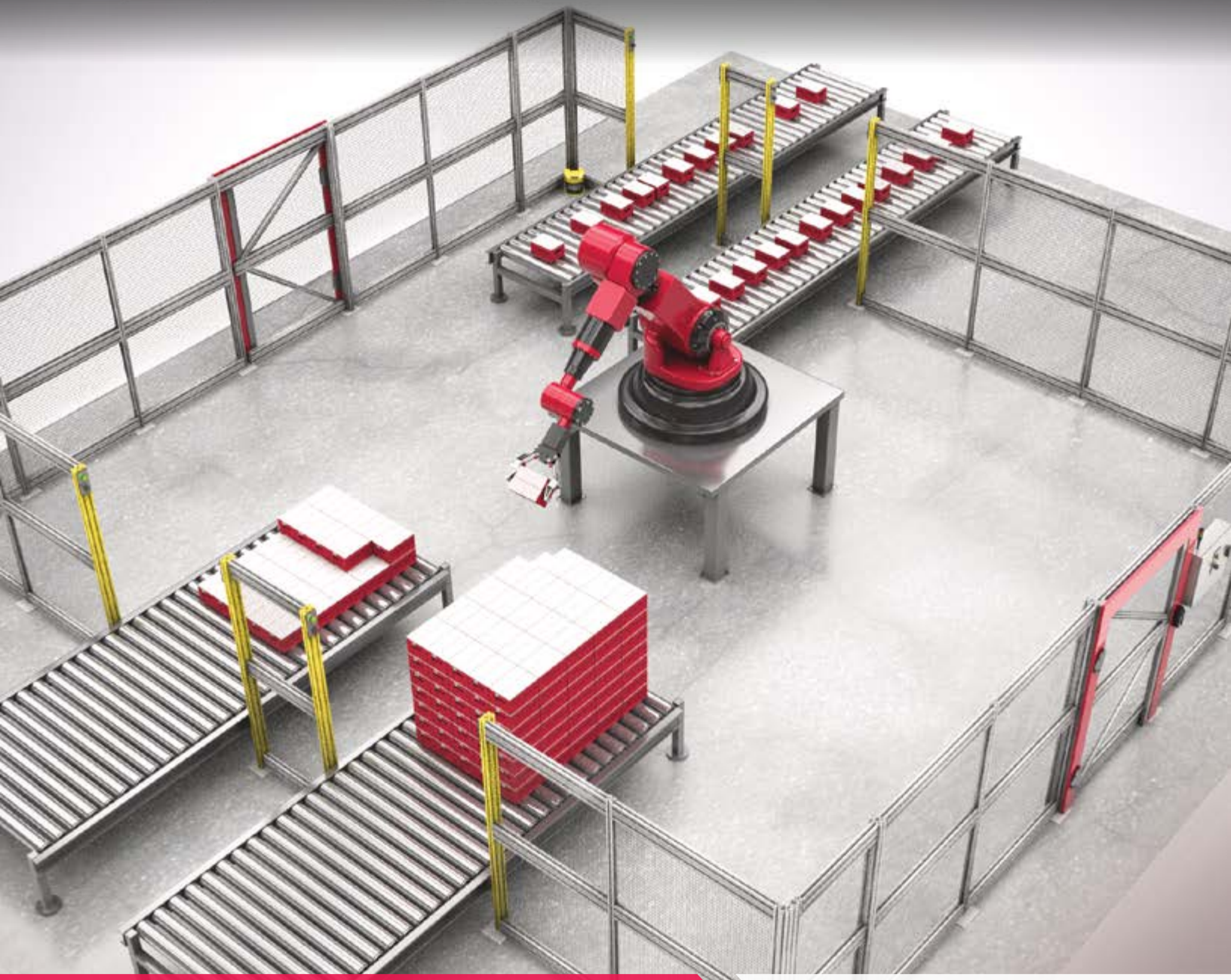

Safeguarding Devices

For Industrial Machines

ROCKFORD SYSTEMS, LLC

Machine Safety Solutions

www.rockfordsystems.com

ROCKFORD SYSTEMS, LLC

DELIVERING TRUSTED MACHINE SAFEGUARDING SOLUTIONS FOR ORGANIZATIONS WORKING WITH INDUSTRIAL MACHINERY

WHY SAFEGUARD?

According to Occupational Safety and Health Administration (OSHA) statistics, nearly 18,000 workers in metal fabricating plants suffer non-fatal injuries annually in the United States. Even with strict machine and operator safety regulations in place, unguarded hazardous machinery remains a major source of fatalities, amputations and other traumatic injuries in manufacturing plants. A recent survey showed an alarming 50 percent or more of metal fabricating machinery in the United States are not in compliance with the critical safety requirements for guarding outlined by OSHA and the American National Standards Institute (ANSI).

Since 1971, the Fortune 500 and many of North America's largest manufacturers have depended upon Rockford Systems for customized machine safeguarding solutions to bring their operations into compliance with today's OSHA regulations, ANSI, RIA and NFPA standards to ensure they are prepared for tomorrow's safety challenges.

MACHINE SAFETY SOLUTIONS

Training and Education

Recommended For

Personnel in EH&S, Production/ Operations/ Maintenance, and Risk Management roles that need safeguarding training

Description

Seminars and webinars that teach people how to safeguard industrial machinery to be in compliance with OSHA regulations, and ANSI/RIA/NFPA standards

Output / Result

Safeguarding Seminar Certificate

Machine Risk Assessment

Recommended For

Organizations with new and/or relocated metal working machines or automation cells that need hazard identification and risk scoring

Description

Identifies the task and associated hazards on machinery

Scores the risk level using the ANSI B11.0-2015 safety standard methods

Output / Result

Hazard Analysis Report

Machine Safeguarding Assessment

Recommended For

Organizations with new, old, refurbished and/or relocated metal working machines, robots or automation cells that need safeguarding solutions and associated costs

Description

Identifies the task and associated hazards on machinery

Recommends safeguarding solutions using the current OSHA regulations, and ANSI/RIA/NFPA standards (or Corporate Standards where applicable)

Output / Result

Machine Safeguarding Assessment & Proposal

Customized, Engineered Integration Solutions

Recommended For

Included with Machine Safeguarding Assessment

Description

Delivers customized engineered and automated safety device interfaces or specialized controls for machines or robots

Output / Result

Machine Safeguarding Assessment & Proposal

OUR MISSION

Our aim is to enhance the long-term health and quality of life of workers in high-risk occupations, while improving the bottom line of the organizations we serve by increasing compliance, reducing risk, lowering costs, and improving productivity.

ROCKFORD SYSTEMS CAN HELP

At Rockford Systems, we are experts at machine guarding because it has been our sole focus for over 45 years. We stand committed to the prevention of injuries and fatalities. We are here to help insurance agencies, academic institutions, and businesses, large and small, address machine safety challenges and to remove the burden of managing the growing legal complexity of OSHA and ANSI requirements from simple turnkey solutions, to more complex customized solutions.

Over 10,000 Safeguarding Products

Recommended For

Included with Machine Safeguarding Assessment

Description

Ensures that industrial machines and automation cells are fully safeguarded to OSHA regulations, and ANSI/RIA/NFPA standards

Includes shields, guards, presence sensing devices, controls, disconnects, starters, covers and more for all metal working machines

Output / Result

Machine Safeguarding Assessment & Proposal

Expert Installation Services

Recommended For

Included with Machine Safeguarding Assessment

Description

OSHA trained installers safely integrate safeguarding products into sophisticated machine controls and train operators on proper use

Output / Result

Machine Safeguarding Assessment & Proposal

Technical Support and In-Field Support

Recommended For

Included with all purchases and installations

Description

Every purchase is backed up with a professional, highly-trained team of Technical Support Advisers

In-Field Service Technicians are available for more complex troubleshooting and repairs

Output / Result

Post purchase support via phone, fax, online or onsite

Ongoing Compliance Validation

Recommended For

Organizations who have completed a guarding installation that seek ongoing compliance validation

Description

Ensures that safeguarding products are inplace, working at optimal performance, and operators are using safeguarding solutions as designed and trained

Output / Result

Included with all Machine Safeguarding Assessment

IN GENERAL 5-7
PRESENCE-SENSING DEVICES 8-9
STOP-TIME MEASUREMENT DEVICE 10-11
QUICK REFERENCE GUIDES 12
POINT-OF-OPERATION LIGHT CURTAIN SYSTEM 13-20
- EZ-Screen Light Curtain System 13-14
- EZ-Screen Dimensions 15
- EZ-Screen Response Times 15
- Noncascading Light Curtain Part Numbering Chart 16
- Remote Fixed Blanking Switch 16
- Cascading Light Curtain Part Numbering Chart 17-18
- EZ-Screen Interfaces 19
- Remote Operator Stations 20
- Laser Alignment Tool 20

PERIMETER LIGHT BEAM SYSTEM 21-24
- Perimeter Light Beam System 21
- Perimeter Light Beam Dimensions 22
- Perimeter Light Beam Part Numbering Chart 23
- Laser Alignment Tool 23
- Perimeter Light Beam Interfaces 24
- Off/On Remote Operator Station 24

SINGLE BEAM SYSTEM 25-26
- Single Beam System 25
- Single Beam Dimensions 25
- Single Beam Part Numbering Chart 26
- Off/On Remote Operator Station 26
- Laser Alignment Tool 26

S3000 SAFETY LASER SCANNER 27-30
- S3000 Safety Laser Scanner 27
- S3000 Mounting Kits 28
- S3000 Floor Stand 28
- S3000 Dimensions 29
- S3000 Safety Laser Scanner Part Numbering Chart 30

ACCESSORIES 31-33
- Tower Light Assemblies 31-32
- No-Go Indicator Light 33
- Test Rods for Light Curtains 33
- Optional Mounting Brackets for Point-Of-Operation Light Curtain Systems 33

SWING-AWAY BRACKETS 34-37
STATIONARY BRACKETS 38-39
FLOOR STAND 39
MIRRORS AND MIRROR BRACKETS 40-41
TWO-HAND CONTROL 42-44
TWO-HAND TRIP 45-46
GATE (MOVABLE BARRIER) DEVICES 47-53
- Type A Gate 47
- Type B Gate 48-49
- Gate Assemblies 50
- Gate Assembly Measurement Forms 51-53

SAFETY BUMPER 54
PRESSURE-SENSITIVE SAFETY MATS 55-59
DETECT-A-FINGER® DROP-PROBE DEVICES 60-66
- RKC-000 and RCK-001 Series 60-62
- RKC-500 Series 63-64
- DAF-100 Series 65-66

REFERENCES 67-72
- Function-Testing Checklist for Light Curtains 67-68
- Function-Testing Checklist for Two-Hand Control 69
- Function-Testing Checklist for Two-Hand Trip 70
- OSHA and ANSI Guard-Opening Requirements 71
- OSHA and ANSI Guard-Opening Scales 72
- Safety Distance Guide 72

TERMS & CONDITIONS OF SALE 73
MACHINE SAFEGUARDING SEMINARS 74-75
INDEX 76-77

The applications described in this catalog are for instructional and informational purposes only; the photos in this catalog are for illustrative purposes only. They may not represent actual usage. This catalog has been carefully checked for accuracy and is thought to be fully consistent with the products described herein. However, Rockford Systems, LLC does not assume liability for the contents of this publication or for the use of any products described herein. Rockford Systems, LLC reserves the right to make changes to the products and documentation without further notice.

This document contains proprietary information protected by copyright. No part of this catalog may be reproduced, transmitted, stored in a retrieval system, or translated into any language, in any form or by any means without prior written permission from Rockford Systems, LLC, 4620 Hydraulic Road, Rockford, Illinois 61109. Rockford Systems reserves the right to make changes or revisions to the material contained in this catalog and cannot be held liable for incidental or consequential damages resulting from the furnishing, performance or use of this material.

Copyright © 2018 by Rockford Systems, LLC. All rights reserved. Not to be reproduced in whole or in part without written permission. LITHO IN U.S.A.

1. **An Act–Public Law 91-596, 91st Congress, S. 2193, December 29, 1970, Duties, Section 5(a)(1)(2)(b)**
2. **OSHA 29 CFR sections that an employer (user) must comply with include:**
3. **OSHA 29 CFR 1910.147 The control of hazardous energy (lockout/tagout).**
4. **OSHA 29 CFR 1910.301-1910.399 Electrical**

ANSI Publications

B11– 2008	General Safety Requirements Common to ANSI B11 Machines
B11.1	Mechanical Power Presses
B11.2	Hydraulic Power Presses
B11.3	Power Press Brakes
B11.4	Shears
B11.5	Iron Workers
B11.6	Lathes
B11.7	Cold Headers and Cold Formers
B11.8	Drilling, Milling, and Boring Machines
B11.9	Grinding Machines
B11.10	Metal Sawing Machines
B11.11	Gear and Spline Cutting Machines
B11.12	Roll Forming and Roll Bending Machines
B11.13	Automatic Screw/Bar and Chucking Machines
B11.14	Coil Slitting Machines
B11.15	Pipe, Tube, and Shape Bending Machines
B11.16	Metal Powder Compacting Presses
B11.17	Horizontal Hydraulic Extrusion Presses
B11.18	Coil Processing Systems
B11.19	Performance Criteria for Safeguarding
B11.20	Integrated Manufacturing Systems
B11.21	Machine Tools Using Lasers for Processing Materials
B11.22	Turning Centers and CNC Turning Machines
B11.23	Machining Centers and CNC Milling, Drilling, and Boring Machines
B11.24	Transfer Machines
B11.TR1	Ergonomic Guidelines
B11.TR2	Mist Control Considerations
B11.TR3	Risk Assessment and Risk Reduction
B11.TR4	Selection of Programmable Electronic Systems (PES/PLC) for Machine Tools
B11.TR5	Sound Level Measurement Guidelines
B11.TR6	Safety Control Systems for Machine Tools
B11.TR7	Design For Safety and Lean Manufacturing
R15.06	Robotic Safeguarding
B15.1	Mechanical Power Transmission Apparatus
B65.1	Printing Press Systems
B65.2	Binding and Finishing Systems
B65.5	Stand-Alone Platen Presses
B151.1	Horizontal (Plastic) Injection Molding Machines
B152.1	Hydraulic Die Casting Presses
B154.1	Rivet Setting Machines
B155.1	Packaging and Packaging-Related Converting Machinery
01.1	Woodworking Machinery

These standards can be purchased by contacting:

ANSI (American National Standards Institute, Inc.)
25 West 43rd Street, 4th Floor
New York, New York 10036
(212) 642-4900 • www.ansi.org

Another good reference for safety on machine tools is the following publication from the National Safety Council:

Safeguarding Concepts Illustrated—7th Edition

This publication can be purchased by contacting:

National Safety Council
1121 Spring Lake Drive
Itasca, IL 60143-3201
1-800-621-7615 • www.nsc.org

Other sources that can be used for reference include:

1. **NFPA 79, Electrical Standard for Industrial Machinery**
2. **NEC (National Electrical Code) Handbook**

These can be purchased by contacting:

National Fire Protection Association
1 Batterymarch Park
Quincy, MA 02169
(617) 770-3000 • www.nfpa.org

3. **NEMA (National Electrical Manufacturers Association)**

1300 North 17th Street, Suite 1752
Rosslyn, VA 22209
(703) 841-3200 • www.nema.org

For additional safety information and assistance in devising, implementing or revising your safety program, please contact the machine manufacturer, your state and local safety councils, insurance carriers, national trade associations, and your state's occupational safety and health administration.

POINT-OF-OPERATION SAFEGUARDING

Safeguarding for metal-fabricating machines falls into three categories: barrier guards, devices, and other safeguarding methods. The only exception to safeguarding is when the hazardous opening is 1/4" or less [OSHA 29 CFR 1910.217(c)(ii)].

Some of the guards and devices described here can be used for auxiliary guarding and for large work-envelope safeguarding. Details can be found in each individual safeguarding section.

BARRIER GUARDS

Barrier guards are designed to prevent entry of the operator's hands or fingers into the point of operation. There are four types of barrier guards that can be furnished. They are die enclosure guards, fixed guards, adjustable guards, and interlocked guards. Each of these guards must meet specific requirements. Please refer to Catalog EX-AL on barrier and perimeter guarding for more information.

SAFEGUARDING DEVICES

According to OSHA 29 CFR 1910.217(c)(i), Point-of-operation devices shall protect the operator by:

(a) Preventing and/or stopping normal stroking of the press if the operator's hands are inadvertently placed in the point of operation (presence-sensing); or

(b) Preventing the operator from inadvertently reaching into the point of operation; or withdrawing his hands, if they are inadvertently located in the point of operation as the dies close (pullbacks); or

(c) Preventing the operator from inadvertently reaching into the point of operation at all times (restraints); or

(d) [Reserved]

(e) Requiring application of both of the operator's hands to machine operating controls and locating such controls at such a safety distance from the point of operation that the slide completes the downward travel or stops before the operator can reach into the point of operation with his hands (two-hand trip or two-hand control); or

(f) Enclosing the point of operation before a press stroke can be initiated, and maintaining this closed condition until the motion of the slide has ceased (type A gate); or

(g) Enclosing the point of operation before a press stroke can be initiated, so as to prevent an operator from reaching into the point of operation prior to die closure or prior to cessation of slide motion during the downward stroke (type B gate).

These safeguarding devices fall into the following categories.

1. **Presence-Sensing Devices (pp. 7-40)**
2. **Two-Hand Control (pp. 41-43)**
3. **Two-Hand Trip (pp. 44-45)**
4. **Gates (A or B) or Movable Barrier Device (pp. 46-52)**

PRESENCE-SENSING DEVICES

These devices are usually photoelectric light curtains or RF (radio frequency) units.

Presence-sensing devices are one of the most versatile and positive means to safeguard many different types of machines or equipment. When using presence-sensing devices, if an object such as an employee's hand, arm, or any part of their body enters the plane of light or light beams, either the cycle will not start or a stop signal will be given to the machine to stop the hazardous motion. Proper use of these devices provides protection not only for operators but also for other employees in the area. They also minimize operator resistance to these types of safety devices due to their nonrestrictive design.

Presence-sensing devices can be used for many types of applications. They can be used on power presses, press brakes, around robotic work envelopes, injection and compression molding machines, assembly systems, transfer lines, automated equipment, flexible manufacturing systems, assembling machines, tube mills, roll formers, and textile machinery. These devices can be used on any machine where the hazardous motion can stop quickly before an individual can reach the hazard.

Presence-sensing devices **cannot** be used on full- revolution-clutch presses or on any other machine that cannot quickly stop the hazardous motion. At the time of this printing, they **cannot** be used as a tripping means (PSDI—presence-sensing device initiation) on mechanical power presses. However, PSDI can be applied to other machines, such as hydraulic power presses and press brakes. Please consult the factory for details if this is a consideration.

Each machine safeguarding application can be placed in one of the following categories:

- **Point of Operation**—protects operators from machine point-of-operation hazards where workpieces or materials are processed.
- **Perimeter/Work-Envelope Safeguarding**—detects entry into a larger area where hazardous motion occurs.

The products and information found in this catalog cover applications for these types of safeguarding. Please do not consider using a perimeter/work-envelope safeguarding device in a point-of-operation type of application.

Presence-sensing devices used for point-of-operation safeguarding must be installed on a machine so that operators' fingers and hands are protected from point-of-operation hazards. Safety standards also state that "guards shall be used to protect all areas of entry to the point of operation not protected by the presence-sensing device."

TWO-HAND CONTROL

Two-hand control can be used as a point-of-operation safeguarding device **as long as the palm buttons are located at the proper safety distance**. This means the palm buttons must be located so that the slide has traveled far enough on the downstroke, or can stop fast enough to prevent the operator from getting into the point-of-operation hazard before the machine can stop. See pages 43-45 for further information on the two-hand control requirements.

TWO-HAND TRIP

Two-hand trip is similar to two-hand control. It can be used on both part- and full-revolution presses as a point-of-operation safeguard **as long as the palm buttons are placed at the proper safety distance**. Two-hand trip requires only momentary actuation of the palm buttons. Once these palm buttons have been depressed, they can be released quickly and the machine will make one full cycle. Please see pages 46-47 for further details on using two-hand trip as a point-of-operation safeguard.

GATES (A OR B) OR MOVABLE BARRIERS

There are two basic types of gates (movable barriers): an A gate and a B gate. The A gate is designed to enclose the point of operation before the press stroke can be started, and it must remain closed until all ram motion has stopped. The following is a typical sequence of operation of a complete cycle on a press which uses an A gate.

1. Initiate the cycle and as long as there are no obstructions, the gate will close by gravity.
2. The machine will make one complete cycle and stop.
3. The gate will open, **after** the cycle has stopped.

The B gate only protects the operator on the downstroke of the press ram. The following is a typical sequence of operation of a complete cycle on a press which uses a B gate.

1. Initiate the cycle and as long as there are no obstructions, the gate will close by gravity.
2. Once the machine reaches the portion of the stroke where the pinch point has been eliminated and before the cycle has stopped, the B gate and the ram go up at the same time.

According to OSHA, an A gate can be used on either part- or full-revolution-clutch presses. Best safety practice and the ANSI B11 standard dictate that only the A gate shall be used on full-revolution-clutch presses. Both A and B gates can be used on part-revolution-clutch presses and hydraulic presses.

SUMMATION

When operating, maintaining, or setting up hazardous machinery, the hands and body of all personnel should never be in the point of operation or any other hazard area. Employees around machinery must be protected at all times. Energy isolation lockout procedures must be practiced and enforced.

This product catalog offers and illustrates a wide range of safeguarding devices, and other safety-related products for updating hazardous machinery and processes to comply with OSHA (Occupational Safety and Health Administration) regulations, ANSI (American National Standards Institute) standards, and the NFPA 79 Electrical Standard for Industrial Machinery. The devices offered can be used to safeguard fabricating machines, metal-cutting machines, robotic cells, packaging machines, material handling equipment, woodworking machines, etc.

Before an employer (user) purchases and applies any of the products offered in this catalog, a risk assessment and/or hazard analysis of the machinery and processes must take place. This ensures correct decisions on the proper safeguarding to be used. As a supplier, we find that employers can make the best safeguarding choices based on maintenance ability, condition of machines, type of operators, training programs, and present and future production requirements. For guidance, please refer to the ANSI technical report B11.TR3 Risk Assessment and Risk Reduction, and ANSI B11-2008 General Safety Requirements Common to ANSI B11 Machines to learn more about hazard identification and the risk assessment and risk reduction process.

Please review this catalog for the numerous choices of safeguarding devices available to industry. If you do not find a product or application that satisfies your needs, please contact us and explain your requirements.

If you require assistance in determining compliance issues with your machinery, please contact us to discuss your needs. Our knowledgeable machine safeguarding specialists can conduct machine safeguarding assessments to determine current compliance levels of each machine and provide a detailed report/proposal which covers the safeguarding solutions required to meet or exceed the OSHA regulations and ANSI standards. Integration and installation services are also available for complete turnkey safeguarding solutions.

Stop-Time Measurement Device
(pp. 10-11)

Quick Reference Guide
(p. 12)

Point-Of-Operation Light Curtain System
(pp. 13-18)

Perimeter Light Beam System
(pp. 21-23)

Single-Beam System
(pp. 25-26)

Safety Laser Scanner
(pp. 27-30)

Accessories
(pp. 31-33)

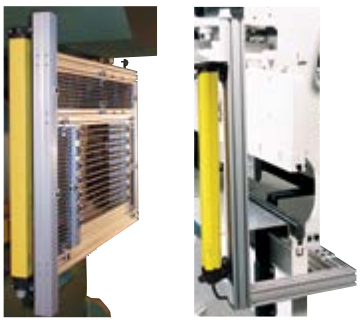

Swing-Away and Stationary Brackets
(pp. 34-38)

Floor Stands, Mirrors, and Mirror Brackets
(pp. 36-41)

INTRODUCTION

Presence-sensing devices are available as infrared point-of-operation light curtains, infrared perimeter multiple light beam devices, infrared single-beam devices, or safety laser scanners. Light curtains used for point-of-operation safeguarding have close channel spacing to protect fingers and hands. Perimeter light curtains have wider channel spacing to detect larger parts of the body. Perimeter, multi-beam, and single-beam devices are designed specifically for perimeter safeguarding. Safety laser scanners are designed for area, access, and point-of-operation safeguarding.

There are many safety requirements that must be met before light curtains can be installed as point-of-operation safeguards. These requirements are located in OSHA 29 CFR 1910.217 and the ANSI B11-series safety standards for machine-tool safety. We have printed the following paragraphs for your convenience.

(c)(3)(i) Point-of-operation devices shall protect the operator by:

(a) Preventing and/or stopping normal stroking of the press if the operator's hands are inadvertently placed in the point of operation;

(c)(3)(iii) A presence sensing point-of-operation device shall protect the operator as provided in paragraph (c)(3)(i)(a) of this section, and shall be interlocked into the control circuit to prevent or stop slide motion if the operator's hand or other part of his body is within the sensing field of the device during the downstroke of the press slide.

(a) The devices may not be used on machines using full revolution clutches.

(b) The devices may not be used as a tripping means to initiate slide motion, except when used in total conformance with paragraph (h) of this section. (See OSHA safety standards for details.)

(c) The device shall be constructed so that a failure within the system does not prevent the normal stopping action from being applied to the press when required, but does prevent the initiation of a successive stroke until the failure is corrected. The failure shall be indicated by the system.

(d) Muting (bypassing of the protective function) of such device during the upstroke of the press slide is permitted for the purpose of parts ejection, circuit checking, and feeding.

(e) The safety distance (Ds) from the sensing field to the point of operation shall be greater than the distance determined by the following formula:

Ds = 63 inches/second x Ts where:

Ds = minimum safety distance (inches);

63 inches/second = hand speed constant; and

Ts = stopping time of the press measured at approximately 90° position of crankshaft rotation (seconds).

(f) Guards shall be used to protect all areas of entry to the point of operation not protected by the presence-sensing device.

MINIMUM SAFETY DISTANCE

The minimum safety distance, which is one of the considerations listed, is defined in ANSI as the minimum distance from the light curtain's plane of light to the closest hazard or danger point where the operator could reach into the hazard.

This minimum safety distance is based on the stopping ability of the machine and a hand speed constant. When the minimum safety distance is calculated, several other factors must be taken into account which are not included in the OSHA formula. These factors include the total system response time including the light curtain, the minimum object sensitivity of the presence-sensing device, and the additional time for brake monitoring. The total system response time includes the stopping time of the machine under worse case conditions, response time of the control system, response time of the presence-sensing device as stated by the manufacturer, the response time of the interface, and, if applicable, additional time allowed for the brake monitor to compensate for variations in normal stopping time.

The depth penetration factor (Dpf), which is based on the light curtain's MOS (minimum object sensitivity), is part of the formula.

The following formula is used to compute the minimum safety distance (Ds) on mechanical power presses to meet the ANSI (American National Standards Institute) B11.1 standard for press safety:

D_S = K (Ts + Tc + Tr + Tspm) + Dpf where:

K = 63 inches/second (hand speed constant)

T_S = Stop time of equipment measured at the final control element

T_C = Response time of the control system

T_r = Response time of the presence-sensing device and its interface

T_{spm} = Additional time allowed for the stopping performance monitor to compensate for variations in normal stopping time

D_{pf} = The added distance due to the depth penetration factor.

Note: If the channel blanking feature is used on light curtains, additional safety distance must be enforced based on the number of channels blanked.

The following is a list of safeguarding devices that could be applied using the above safety distance formula. For more details, see ANSI B11.1-2009.

1. Interlocked barrier guards
2. Two-hand control devices
3. Two-hand trip devices
4. Single control safeguarding devices
5. Electro-optical presence-sensing devices
6. RF (radio-frequency) presence-sensing devices
7. Safety mat devices
8. Safety edge device

PORTABLE STOP-TIME MEASUREMENT (STM) DEVICE

The stop-time measurement (STM) device measures the time it takes a machine to stop after a signal is given. It is mainly used on reciprocating (stroking or cycling) machines, such as mechanical or hydraulic presses and press brakes. With optional accessories, it can also be used on machines that rotate, such as lathes, mills, and drills.

Industry uses this type of device to determine the stopping time of a machine before installing safeguarding devices such as a two-hand control or a presence-sensing device. The stopping time measured by the STM device during the hazardous portion of the cycle is used in the OSHA (Occupational Safety and Health Administration) or ANSI (American National Standards Institute) formulas to calculate the safety distance. The safety distance is then used to establish the location of the safeguarding device in relation to the nearest hazard. This device can also be used to periodically check the machine's stopping time to ensure that the current safety distance corresponds to the current condition of the machine's stopping ability.

FEATURES

- Easy to use in the field
- Portable; battery-operated
- Readout in stopping time and safety distance
- Handy carrying case
- Easy programming
- Machine memory
- Preprogrammed light cutain response time and minimum object sensitivity
- Choice of hand-speed constant

SPECIFICATIONS:

Electronics

Display
- Description ..... 4 digit, 14 segment, ¼" red LED
- Stop Time ..... 0-9999 milliseconds
- Safety Distance ..... 0-999.9 inches
- Automatic Decimal ..... Yes
- Lead Zero Blanking ..... Yes

Accuracy ..... ±1%
Power Source ..... 115 V AC or internal battery
Battery Type ..... 6 V, sealed lead acid
Operating Time ..... 10 hours (full charge)
Recharge Time ..... 8 hours
Battery Charger ..... Contained

Mechanical

Meter
- Material ..... Aluminum with baked enamel finish
- Dimensions ..... 11" L x 7" D x 7" H
- Weight ..... 9 lb

Hand-Held Actuator
- Material ..... Aluminum with baked enamel finish
- Dimensions ..... 4½" dia. x 2" H
- Weight ..... 3 lb

Position/Velocity Transducer
- Material ..... Aluminum with baked enamel finish
- Dimensions ..... 5¼" L x 2¾" D x 4¾" H
- Weight ..... 1.6 lb
- Cable stroke ..... 49"

When using this STM device, the display gives both the stopping time of the machine in milliseconds (thousandths of a second), and the calculated safety distance in inches. The safety distance is based on the hand speed constant of 63 inches (1.6 meters) per second. For mechanical power presses, the OSHA formula multiplies the hand speed constant by the stopping time of the machine at 90° of crankshaft rotation. When using this formula, the reaction time of either ergonomic (capacitive) palm buttons or a presence-sensing device should be added to the stopping time to calculate the proper safety distance. Please refer to the formula found in the ANSI B11.1 standard for mechanical power presses.

This STM device is also used by federal and state OSHA compliance officers, insurance company loss-control engineers, and safety training personnel to determine if proper safety distances are being used for the existing safeguarding method.

The portable design makes the STM very easy to use. A programmed stop signal is provided, which releases or actuates a button or other operator-controlled device on the machine during the hazardous portion of the cycle. If a machine has a presence-sensing device, the plane of light can be interrupted with the furnished flag, which sends a signal to stop the machine.

This device consists of three major components:

1. The meter which is the processor containing the electronics and display.
2. The position/velocity transducer which detects motion and provides the programmed output signal to stop the machine.
3. The hand-held actuator which automatically releases or pushes a button or other device on the machine. It is also used to operate the flag when presence-sensing devices are used as the safeguarding method.

Other STM components provided with this device are the presence-sensing flag, cable extension set, legs, plunger extension, and instruction manual.

ORDERING INFORMATION

Part No. DCL-100—Complete STM in a carrying case including meter, transducer, cable extension set, hand-held actuator, presence-sensing flag, legs, plunger extension, and instruction manual.

Optional Accessories

Part No. DCL-101—Remote tachometer assembly
(for reciprocating machines that stop beyond bottom or top, and for machines with relatively slow rotating or lineage motion)
Note: Requires DCL-102 (see below)

Part No. DCL-102—One NO manual start switch

FIELD OF COVERATE IN INCHES (mm)	A INCHES (mm)	B INCHES (mm)	C INCHES (mm)	D INCHES (mm)
12 (300)	11.8 (300)	14.6 (372)	16.0 (405)	13.7 (347)
18 (450)	17.7 (450)	20.6 (522)	21.9 (555)	19.6 (497)
24 (600)	23.6 (600)	26.4 (671)	27.7 (704)	25.4 (646)
30 (750)	29.5 (750)	32.3 (821)	33.6 (854)	31.3 (796)
35 (900)	35.4 (900)	38.2 (971)	39.5 (1004)	37.2 (946)
41 (1050)	41.3 (1050)	44.1 (1120)	45.4 (1153)	43.1 (1095)
47 (1200)	47.2 (1200)	50.0 (1270)	51.3 (1303)	49.0 (1245)
53 (1350)	53.1 (1350)	55.9 (1420)	57.2 (1453)	54.9 (1395)
59 (1500)	59.1 (1500)	61.8 (1569)	63.1 (1602)	60.8 (1544)
65 (1650)	65.0 (1650)	67.7 (1719)	69.0 (1752)	66.7 (1694)
71 (1800)	70.9 (1800)	73.6 (1869)	74.9 (1902)	72.6 (1844)

Selection Guide for Point-of-Operation and Perimeter (Work-Envelope) Safeguarding

This chart has been put together to make selecting the proper safeguarding system for your application easy. Begin by determining the type of application that requires safeguarding. Choose the point-of-operation system, perimeter system, single beam system, or area scanning device that fits your application. If at any time you have questions, please call us at 1-800-922-7533.

PRESENCE-SENSING DEVICES QUICK REFERENCE GUIDE SAFETY CATEGORY FOR 4 PRODUCTS				
	EZ-SCREEN LIGHT CURTAIN pp. 12-19	PERIMETER LIGHT BEAM pp. 20-23	SINGLE BEAM SYSTEM pp. 24-25	CONTACT THE FACTORY
Point of Operation	X			
Perimeter	X	X	X	
Entry/Exit				X
Palletizing				X
Cables	Up to 100' (30.4 m)	Up to 100' (30.4 m)	Up to 100' (30.4 m)	
Max Field of Coverage	70.9" (1800 mm)	35" (900 mm)		
Fixed Blanking	X			
Remote Fixed Blanking	X			
Float Blanking/Reducted Resolution	X			
Cascade Capability	X			
Max Field of Coverage	.55" (14 mm) or 1.18" (30 mm)		1 Beam	
Max Rage	Up to 59' (18 m)	Up to 230' (70 m)	Up to 230 (70 m)	

AREA SCANNING DEVICES QUICK REFERNCE GUIDE SAFETY CATEGORY 3 PRODUCTS			
	S3000 STANDARD pp. 26-29	S3000 ADVANCED pp. 26-29	S3000 PROFESSIONAL pp. 26-29
Area	X	X	X
Stationary	X	X	X
Protective Field – Max Range	23' (7 m)	23' (7m)	23' (7m)
Warning Field – Max Range	160' (49 m)	160' (49 m)	160' (49 m)
Number of Zones	1	4	8
Scanning Angle	190°	190°	190°

EZ-SCREEN LIGHT CURTAIN SYSTEM

FEATURES

- Meets industry OSHA, ANSI, UL, IEC, and EN safety standards 14 and 30 mm resolutions
- Field of coverage from 11.8” to 70.9” (300 mm to 1800 mm)
- Scanning range up to 59’ (18 m)
- 2 solid-state OSSD (output signal switching device) outputs—24-V PNP outputs
- Quick response times
- Strobe-light and weld-flash immunity
- Compact light bar housing—1.78” x 1.42” (45.2 x 36.0 mm)
- Transmitter and receiver cable lengths from 15’ to 100’ (4.5 to 30 m)
- 7-segment alignment and diagnostics display
- Two-piece design with external device monitoring (EDM)
- Cascading—up to 4 pairs and of different lengths

This photoelectric presence-sensing system (light curtain) is designed to meet safety standards for protecting operating personnel from point-of-operation machine hazards. The EZ-Screen system operates as a stand-alone system to be interfaced into an existing machine control, or a generic interface control is available (see page 19).

The EZ-Screen system consists of a transmitter and receiver. The transmitter consists of a series of LEDs (light-emitting diodes) which transmit modulated infrared light to the receiver unit. The receiver consists of a corresponding array of photo-diodes that are automatically synchronized with the transmitter LEDs. The EZ-Screen system can be mounted vertically, horizontally, or on any angle depending on the application. The only requirement is that the transmitter must align with the receiver when these units are installed. This system is also cascadable up to four systems. The cascadable pairs can be any length, any number of beams, or have different resolutions as long as each transmitter matches its own receiver.

The EZ-Screen presence-sensing system provides a protective, durable plane of light formed by the aligned transmitter and receiver cells. Any interruption of this plane of light by an object equal to or larger than the MOS (minimum object sensitivity) initiates an output signal to the machine control system. This output causes the machine to stop or does not allow a cycle until the blockage is removed.

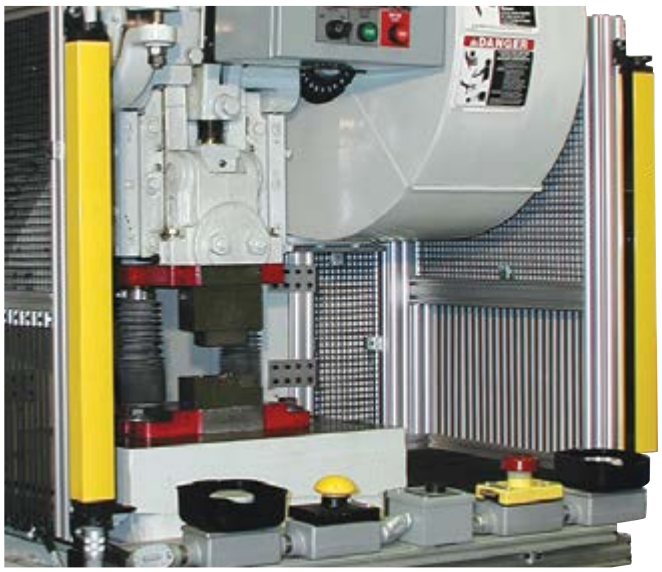

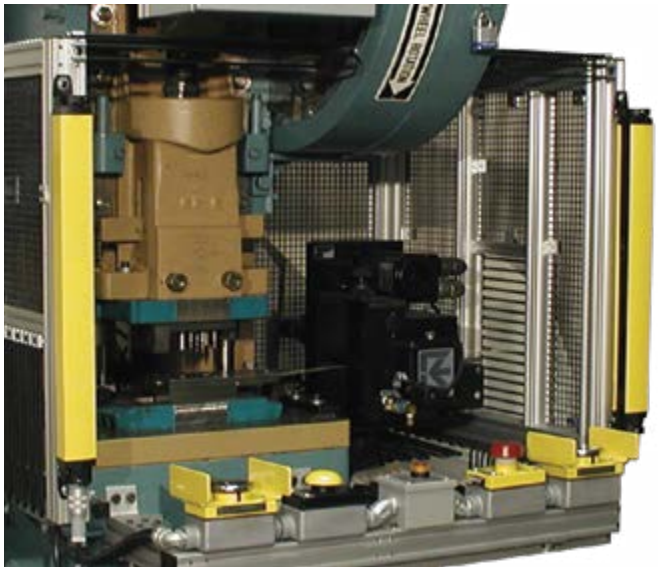

The EZ-Screen system is designed in a way that if a component should fail, a total system shutdown results. This is achieved through redundant self-checking circuitry, which compares the actual system operation with that of a redundant setup. Upon detection of any deviation from the expected status, a shutdown condition occurs.

The plane-of-light portion of the system is formed by a series of high-quality individual optical lenses on every transmitter and receiver channel. This assures the optimal signal-to-noise ratio and allows operation in harsh, oily, and dirty environments. Individual channel lenses create a column of light between each of the active transmitter and receiver channels. The creation of a column of light between transmitter and receiver is called light collimation. Light collimation is necessary to ensure that the infrared light moves from the transmitter to the receiver in a controlled beam that maximizes its efficiency. Additionally, the lens on each receiver channel minimizes the possibility of the infrared light bouncing off shiny objects and fooling the receiver.

The light bars are equipped with status indicators—LEDs and a 7-segment display. These status indicators are helpful when aligning the light curtain and when determining the cause of an interruption in the EZ-Screen system. The LEDs illuminate and the display indicates alphanumeric error messages when a channel is interrupted, out of alignment, configured incorrectly, etc.

The EZ-Screen light curtain system modulates each of its LED light sources in a specially coded manner. This modulation virtually eliminates ambient light interference. The light curtain electronically sequences its individual LED transmitters and photo-transistor receivers at a fast rate that prevents any light interference between individual transmitter/receiver sections. This also provides maximum stability and ease of alignment.

STATUS INDICATOR LIGHTS

A variety of status indicator lights are clearly visible on the front panel of each transmitter and receiver. Red, green, and yellow lights display the operating status, configuration error codes, and blocked beams. A diagnostic display indicates alphanumeric error messages when a channel is interrupted, out of alignment, configured incorrectly, blocked, etc.

EZ-Screen Light Curtain System

Transmitter *Receiver*

Transmitter

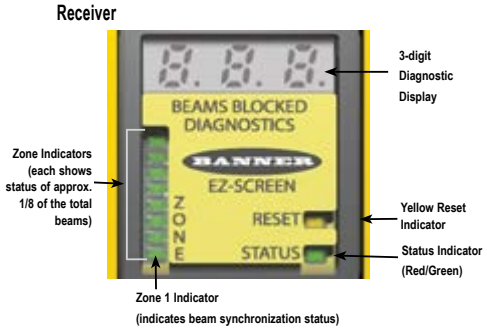

Receiver

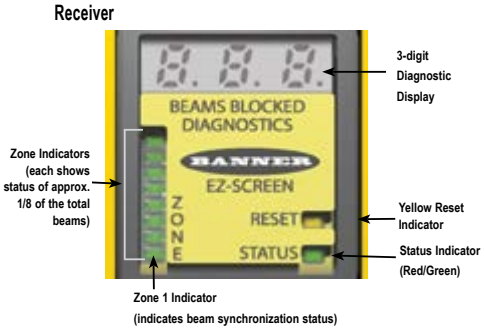

DIMENSIONS FOR THE EZ-SCREEN LIGHT CURTAIN SYSTEM

FIELD OF COVERATE IN INCHES (mm)	A INCHES (mm)	B INCHES (mm)	C INCHES (mm)	D INCHES (mm)
12 (300)	11.8 (300)	14.6 (372)	16.0 (405)	13.7 (347)
18 (450)	17.7 (450)	20.6 (522)	21.9 (555)	19.6 (497)
24 (600)	23.6 (600)	26.4 (671)	27.7 (704)	25.4 (646)
30 (750)	29.5 (750)	32.3 (821)	33.6 (854)	31.3 (796)
35 (900)	35.4 (900)	38.2 (971)	39.5 (1004)	37.2 (946)
41 (1050)	41.3 (1050)	44.1 (1120)	45.4 (1153)	43.1 (1095)
47 (1200)	47.2 (1200)	50.0 (1270)	51.3 (1303)	49.0 (1245)
53 (1350)	53.1 (1350)	55.9 (1420)	57.2 (1453)	54.9 (1395)
59 (1500)	59.1 (1500)	61.8 (1569)	63.1 (1602)	60.8 (1544)
65 (1650)	65.0 (1650)	67.7 (1719)	69.0 (1752)	66.7 (1694)
71 (1800)	70.9 (1800)	73.6 (1869)	74.9 (1902)	72.6 (1844)

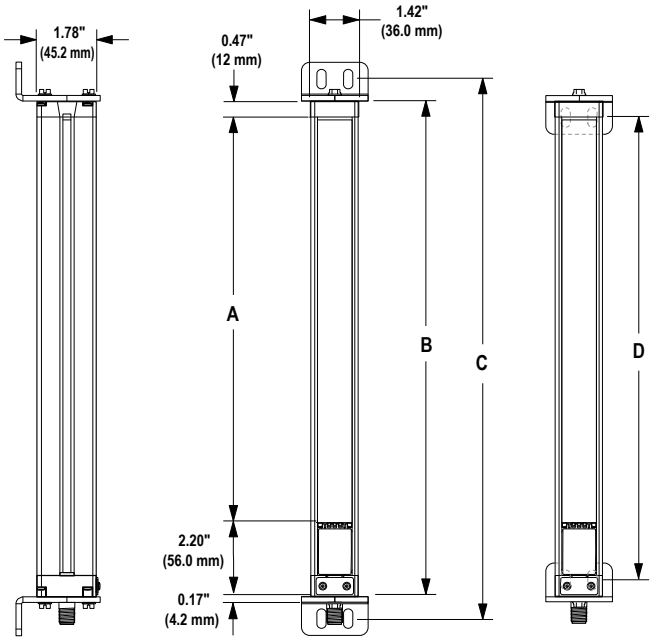

EZ-SCREEN RESPONSE TIMES

The response time of these light curtains varies depending on their size (see the chart below). The response time is the length of time that elapses between the interruption of the light beam and the output signal. Response time includes the reaction time of the output device(s) (i.e., relays), and is specified in milliseconds.

These light curtains are designed to meet UL and CSA standards and also have full PSDI (presence-sensing-device initiation) capability. This means that the light curtain can be used to start the cycle of the machine while at the same time it can be safeguarding the machine. For further information on PSDI, please see OSHA 29 CFR 1910.217 (h) and ANSI B11.1, B11.2, B11.3, and B11.19.

Transmitter/Receiver With .55" (14 mm) Minimum Object Sensitivity (Resolution)

FIELD OF COVERATE INCHES (mm)	NUMBER OF BEAMS	RESPONSE TIME
12 (300)	40	15 ms
18 (450)	60	19 ms
24 (600)	80	23 ms
30 (750)	100	27 ms
35 (900)	120	32 ms
41 (1050)	140	36 ms
47 (1200)	160	40 ms
53 (1350)	180	43 ms
59 (1500)	200	48 ms
65 (1650)	220	52 ms
71 (1800)	240	56 ms

Transmitter/Receiver With 1.18" (30 mm) Minimum Object Sensitivity (Resolution)

FIELD OF COVERATE INCHES (mm)	NUMBER OF BEAMS	RESPONSE TIME
12 (300)	20	11 ms
18 (450)	30	13 ms
24 (600)	40	15 ms
30 (750)	50	17 ms
35 (900)	60	19 ms
41 (1050)	70	21 ms
47 (1200)	80	23 ms
53 (1350)	90	25 ms
59 (1500)	100	27 ms
65 (1650)	110	30 ms
71 (1800)	120	32 ms

SELECTING A NONCASCADING EZ-SCREEN LIGHT CURTAIN

To determine the 9-digit configured part number for a noncascading light curtain required, follow the directions and use the information in the **PART NUMBERING SYSTEM CHART** below.

1. The first 3 digits for all EZ-Screen light curtain pairs are LCB.
2. The 4th digit determines the MOS (minimum object sensitivity) and OPR (operating range).
3. The 5th and 6th digits determine the field of coverage.
4. The 7th digit determines the selection of remote keyed fixed blanking.
5. The 8th digit indicates the length of the transmitter cable.
6. The 9th digit indicates the length of the receiver cable (can be a different length from the transmitter cable).

SAMPLE

1	2	3	4	5	6
L C B	3	2 4	1	5	7

The sample shown, Part No. LCB-3-24-1-5-7, is an EZ-Screen light curtain pair with 1.18" (30 mm) minimum object sensitivity, 1-59' (18 m) operating range, 23.6" (600 mm) field of coverage, remote fixed blanking, a 50' transmitter cable, and a 75' receiver cable.

NONCASCADING LIGHT CURTAIN PRESENCE-SENSING DEVICE SYSTEM

LCB - X - X X - X - X - X

MOS (MINIMUM OBJECT SENSITIVITY) AND OPR (OPERATING RANGE)

	MOS	OPR
1	0.55" (14 mm)	19.68' (6 m)
3	1.18" (30 mm)	59' (18 m)

FIELD OF COVERAGE

12	11.8" (300 mm)
18	17.7" (450 mm)
24	23.6" (600 mm)
30	29.5" (750 mm)
35	35.4" (900 mm)
41	41.3" (1050 mm)
47	47.2" (1200 mm)
53	53.1" (1350 mm)
59	59" (1500 mm)
65	65" (1650 mm)
71	70.9" (1800 mm)

REMOTE FIXED BLANKING SWITCH

1	Yes–includes 1' (.31 m) connection cable
2	No

RECEIVER CABLE W/PLUG

0	No cable
1	15' (4.5 m)
2	25' (7.6 m)
5	50' (15.2 m)
7	75' (22.8 m)
9	100' (30.4 m)

TRANSMITTER CABLE W/PLUG

0	No cable
1	15' (4.5 m)
2	25' (7.6 m)
5	50' (15.2 m)
7	75' (22.8 m)
9	100' (30.4 m)

Four (4) end mount swivel brackets are included with each light bar pair for mounting.

Two (2) additional center mounting brackets are included with each light bar pair with a field of coverage of 47 and up.

REMOTE FIXED BLANKING SWITCH

A remote fixed blanking switch is provided when the remote fixed blanking switch option is chosen in the part numbering chart above. This remote blanking switch is used in place of the DIP switches on the receiver when frequent configuration of fixed blanking is needed. A 1' connection cable, two (2) mounting brackets, and two (2) keys are supplied with each remote switch.

SELECTING THE FIRST PAIR IN A CASCADING EZ-SCREEN LIGHT CURTAIN SYSTEM

To determine the 9-digit configured part number for the first pair in a cascading light curtain system, follow the directions and use the information in the **PART NUMBERING SYSTEM CHART** below.

1. The first 4 digits for the first pair in a cascading light curtain system are LCBC.
2. The 5th digit determines the MOS (minimum object sensitivity) and OPR (operating range).
3. The 6th and 7th digits determine the field of coverage.
4. The 8th digit determines the length of the transmitter cable. NOTE: This is required for the first pair of cascading light bar pairs only.
5. The 9th digit determines the length of the receiver cable (can be a different length from the transmitter cable). NOTE: This is required for the first pair of cascading light bar pairs only.

SAMPLE—FIRST IN CASCADE SYSTEM

1 2 3 4 5
L C B C - 3 - 1 8 - 1 - 2

The sample shown, Part No. LCBC-3-18-1-2, is the first pair in the cascading system. It has 1.18” (30 mm) minimum object sensitivity, 1-59’ (18 m) operating range, 17.7” (450 mm) field of coverage, a 15’ transmitter cable, and a 25’ receiver cable.

CASCADING LIGHT CURTAIN PRESENCE-SENSING DEVICE SYSTEM

LCBC - X - X X - X - X

MOS (MINIMUM OBJECT SENSITIVITY) AND OPR (OPERATING RANGE)

	MOS	OPR
1	—0.55” (14 mm)	19.68’ (6 m)
3	—1.18” (30 mm)	59’ (18 m)

LENGTH OF BARS

12	—11.8” (300 mm)
18	—17.7” (450 mm)
24	—23.6” (600 mm)
30	—29.5” (750 mm)
35	—35.4” (900 mm)
41	—41.3” (1050 mm)
47	—47.2” (1200 mm)
53	—53.1” (1350 mm)
59	—59” (1500 mm)
65	—65” (1650 mm)
71	—70.9” (1800 mm)

RECEIVER CABLE W/PLUG (REQUIRED FOR FIRST IN CASCADE ONLY)

0	—No cable
1	—15’ (4.5 m)
2	—25’ (7.6 m)
5	—50’ (15.2 m)
7	—75’ (22.8 m)
9	—100’ (30.4 m)

TRANSMITTER CABLE W/PLUG (REQUIRED FOR FIRST IN CASCADE ONLY)

0	—No cable
1	—15’ (4.5 m)
2	—25’ (7.6 m)
5	—50’ (15.2 m)
7	—75’ (22.8 m)
9	—100’ (30.4 m)

Four (4) end mount swivel brackets are included with each light bar pair for mounting.

Two (2) additional center mounting brackets are included with each light bar pair with a field of coverage of 47 and up.

NOTE: Use the chart on the next page to configure an additional part number for each of the 2nd, 3rd, and/or 4th pair in the cascading system. A maximum of four (4) light bar pairs may be cascaded, and they can be of different lengths.

SELECTING THE 2ND, 3RD, AND/OR 4TH PAIR IN A CASCADING EZ-SCREEN LIGHT CURTAIN SYSTEM

To determine the 9-digit configured part number for the 2nd, 3rd, and/or 4th pair in a cascading light curtain system, follow the directions and use the information in the **PART NUMBERING SYSTEM CHART** below.

1. The first 4 digits for the 2nd, 3rd, and/or 4th pair in a cascading light curtain system are LCBC.
2. The 5th digit determines the MOS (minimum object sensitivity) and OPR (operating range).
3. The 6th and 7th digits determine the field of coverage.
4. The 8th digit determines the length of the connecting cables between the transmitters.
5. The 9th digit determines the length of the connecting cables between the receivers.

SAMPLE—SECOND IN CASCADE SYSTEM

1 2 3 4 5
L C B C - 3 - 2 4 - C - C

The sample shown, Part No. LCBC-3-24-C-C, is the second pair in the cascading system. It has 1.18" (30 mm) minimum object sensitivity, 1-59' (18 m) operating range, 23.6" (600 mm) field of coverage, and a 3' transmitter connecting cable with a 3' receiver connecting cable.

CASCADING LIGHT CURTAIN PRESENCE-SENSING DEVICE SYSTEM

LCBC - X - X X - X - X

MOS (MINIMUM OBJECT SENSITIVITY) AND OPR (OPERATING RANGE)

	MOS	OPR
1	0.55" (14 mm)	19.68' (6 m)
3	1.18" (30 mm)	59' (18 m)

LENGTH OF BARS

12	11.8" (300 mm)
18	17.7" (450 mm)
24	23.6" (600 mm)
30	29.5" (750 mm)
35	35.4" (900 mm)
41	41.3" (1050 mm)
47	47.2" (1200 mm)
53	53.1" (1350 mm)
59	59" (1500 mm)
65	65" (1650 mm)
71	70.9" (1800 mm)

CASCADE RECEIVER CABLE LENGTH

A	1' (.31 m)
B	3' (.91 m)
C	8' (2.43 m)

CASCADE TRANSMITTER CABLE LENGTH

A	1' (.31 m)
B	3' (.91 m)
C	8' (2.43 m)

Four (4) end mount swivel brackets are included with each light bar pair for mounting.

Two (2) additional center mounting brackets are included with each light bar pair with a field of coverage of 47 and up.

NOTE: Use the chart above to configure a part number for EACH additional cascading light bar pair for the 2nd, 3rd, and/or 4th pair in the cascading system. A maximum of four (4) light bar pairs may be cascaded, and they can be of different lengths.

EZ-SCREEN LIGHT CURTAIN INTERFACES

The EZ-Screen interfaces are available in several variations. They are available with the components furnished loose, in a plain door enclosure, or in an enclosure with the operators on the door. Depending on the requirements, component options include terminals, fuses, a safety monitoring relay, force-guided relays, a light curtain off/on selector switch, a pwer supply, a reset pushbutton, and an enclosure. Select an EZ-Screen standard light curtain interface from the chart on this page based on your requirements.

EZ-Screen interfaces provide a generic tie-in to most control systems. These interfaces can supply the 24-V DC power needed to operate the light curtains. The light curtains provide two solid-state OSSD (output signal switching device) outputs, and since many control systems are not compatible with this type of output, interfaces are available. These units incorporate a safety monitoring relay to provide a Category 4 interface when properly integrated with the existing controls system. Some control systems require more relay contacts than are available on a safety monitoring relay, therefore, force-guided relays can be provided that will work in conjunction with the safety monitoring relays. This provides additional contacts and still maintains a Category 4 interface.

A light curtain off/on selector swith is also an available option. This selector switch gives the option to run the machine in the setup mode. Other safegaurding methods must be used when the light curtain selector switch is in the off position.

A light curtain reset pushbutton can also be chosen as an option. It allows easy access for the light curtain to be reset.

If necessary, special interfaces can be provided that will show the exact tie-in of the light curtains to your control system. We will need your existing electrical control system schematics to verify that it is compliant and that it is capable of accepting a light curtain tie-in. Please contact our factory for more information.

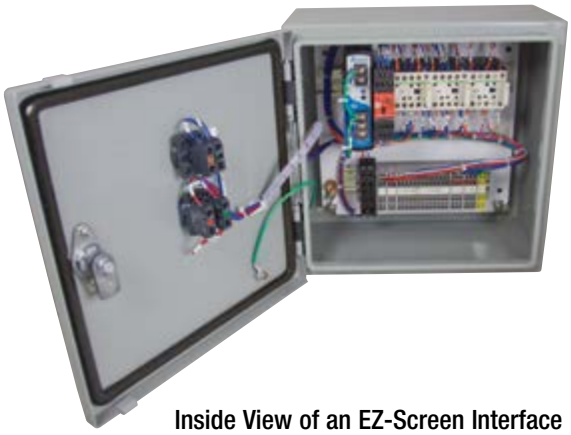

Inside View of an EZ-Screen Interface

LIGHT CURTAIN INTERFACE FOR EZ-SCREEN LIGHT CURTAINS								
LRS-XXXX PART NO.								
FEATURES	**1012**	**1013**	**1014**	**1015**	**1016**	**1017**	**1018**	**1019**
Terminals			X	X	X	X	X	X
Fuses			X	X	X	X	X	X
Safety Monitoring Relay	X	X	X	X	X	X	X	X
Force-Guided Relays (2)	X	X		X		X	X	X
Light Curtain Off/On Selector Switch						X	X	X
Power Supply		X			X		X	X
Enclosure			X	X	X	X	X	X
Reset Pushbtton								X

REMOTE OPERATOR STATIONS

Remote operator stations are available that can be used in conjunction with an interface when a plain door enclosure or loose interface components are chosen. These remote operator stations are available with an off/on keyed selector switch, a light curtain reset button, or an off/on keyed selector switch and reset button. Each remote operator station is furnished in a steel enclosure.

ORDERING INFORMATION	
PART NO.	**DESCRIPTION**
LLD-1236	Light Curtain off/on remote operator station
LLD-1237	Light Curtain reset remote operator station
LLD-1238	Light Curtain on/off with reset remote operator station

LLD-1236

LLD-1237

LLD-1238

LASER ALIGNMENT TOOL—PART NO. LAT-1

A laser alignment tool is available to aid in the alignment of any point-of-operation light curtain system. It is particularly useful with applications involving mirrors.

The laser alignment tool includes a 9-volt battery, a mounting clip, and has a built-in circular bubble level. **This alignment tool is to be used for set up only.**

PERIMETER LIGHT BEAM SYSTEM

The perimeter light beam system is designed to meet safety standards for one-sided or multi-sided hazardous area and access protection. It can be used for safeguarding robotic work cells, automatic machinery work envelopes, assembly lines, and other manufacturing work cells.

FEATURES

- Meets industry OSHA, ANSI, UL, IEC, and EN safety standards
- Operating ranges: Short—2.6' to 65' (.8 to 20 m)
  Long—49' to 230' (15 to 70 m)
- Number of beams—2, 3, or 4
- Beam separation—12" to 23" (300 mm to 584 mm)
- 24 ms response time
- Strobe-light and weld-flash immunity
- Transmitter and receiver cable lengths up to 100' (30.5 m)
- Restart interlock
- External device monitoring (EDM)
- LED 7-segment alignment and diagnostics display

The perimeter light beam system consists of a transmitter and receiver. Each is encased in a rigid, aluminum die-cast housing which makes them very durable. Communication between the transmitter and receiver is accomplished optically; no external controller is required.

An invisible infrared beam of light is formed between the transmitter and receiver. Interruption of this beam of light sends a stop signal to the machine's control. This signal is designed to stop hazardous machine motion or prevent the initiation of machine motion.

Mirrors increase the coverage of the safeguarded area. Two sides of a hazardous area can be safeguarded with the use of one perimeter light beam system and one mirror. Three sides of a hazardous area can be safeguarded by using one perimeter light beam system and two mirrors. See pages 40 for information about mirrors.

The perimeter light beam system is delivered ready for operation. Configuration settings are accessible from the front of the beams and can be changed while the system remains mounted.

Perimeter Light Curtain System Used as Access Protection for an Automatic Machine Work Envelope

PERIMETER LIGHT BEAM DIMENSIONS

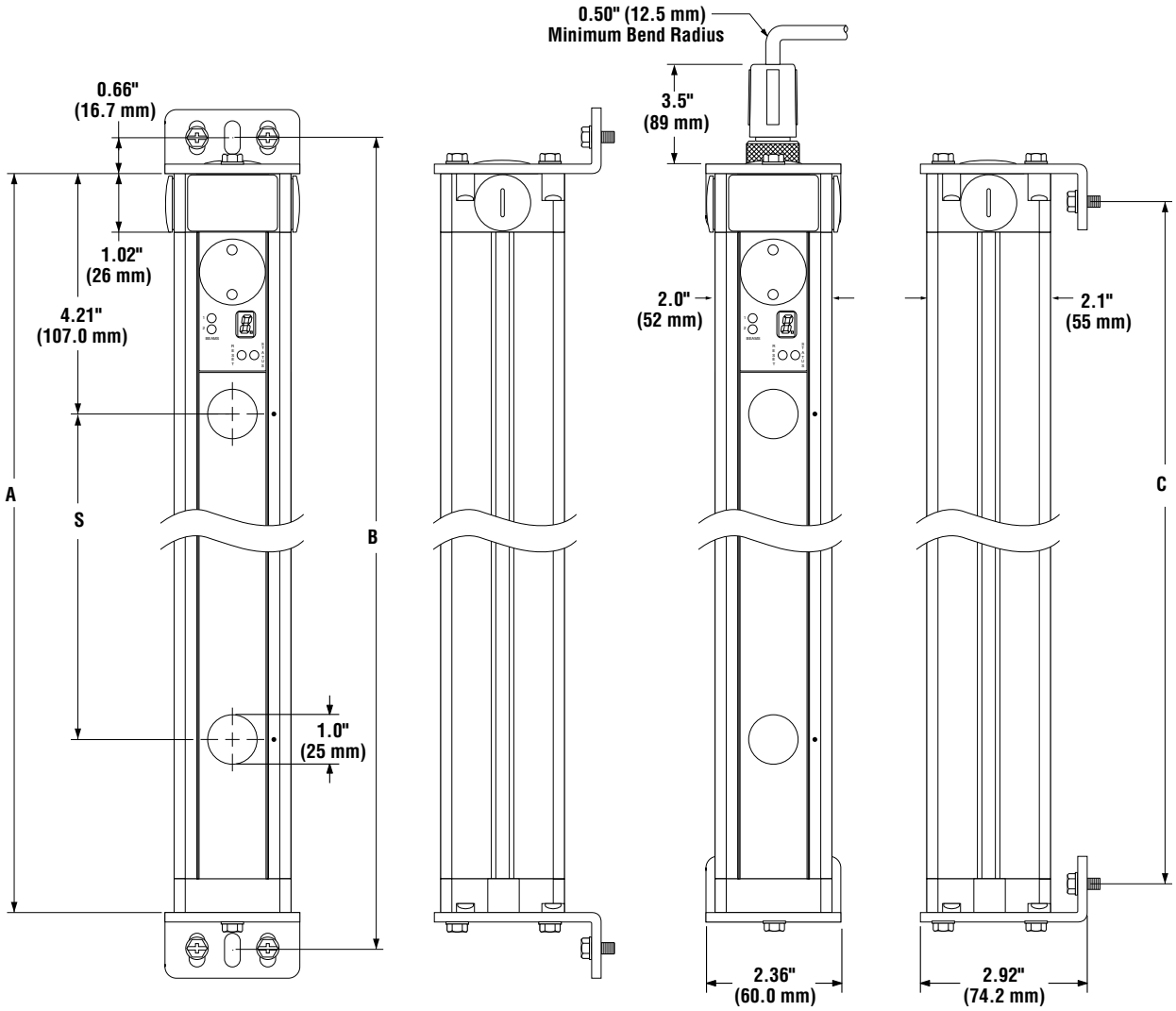

NUMBER OF BEAMS	FIELD OF COVERAGE INCHES (mm)	S BEAM SEPARATION INCHES (mm)	A INCHES (mm)	B INCHES (mm)	C INCHES (mm)
2	19.7 (500)	19.7 (500)	26.9 (684)	28.2 (717)	25.9 (659)
2	23 (584)	23 (584)	30.8 (768)	31.6 (802)	29.3 (743)
3	31.5 (800)	15.7 (400)	38.7 (984)	40.1 (1017)	37.8 (959)
3	42 (1066)	21 (533)	49.2 (1251)	50.6 (1284)	48.3 (1226)
4	35.4 (900)	11.8 (300)	42.7 (1084)	44 (1117)	41.7 (1059)

SELECTING PERIMETER LIGHT BEAM SYSTEM

To determine the 8-digit configured part number for the perimeter light beam system required, follow the directions below and use the information in the **PART NUMBERING SYSTEM CHART** below.

1. The first 3 digits determines the choice of a short range perimeter system or a long range perimeter system.
2. The 4th, 5th, and 6th digits determine the number of beams and beam separation.
3. The 7th digit determines the length of the transmitter cable.
4. The 8th digit determines the length of the receiver cable (can be a different length from the transmitter cable).

SAMPLE

1	2	3	4
P B S	- 3 4 2	- 1	- 2

The sample shown, Part No. PBS-342-1-2, is a short range perimeter light beam system. It has three beams with 21.0” (533 mm) of beam separation, 42.0” (1066 mm) field of coverage, with a 15’ (4.5 m) transmitter cable and a 25’ (7.6 m) receiver cable.

PERIMETER LIGHT BEAM PART NUMBERING SYSTEM CHART

X X X - X X X - X - X

PERIMETER LIGHT BEAM SYSTEM TYPE

- PBS —Short range: 2.62’ to 65.6’ (0.8 m to 20 m)
- PBL —Long range: 49.2’ to 229.6’ (15 m to 70 m)

NUMBER OF BEAMS, BEAM SEPARATION, AND FIELD OF COVERAGE

	NO. OF BEAMS	SEPARATION	FIELD OF COVERAGE
219 —	2	19.7” (500 mm)	19.7” (500 mm)
223 —	2	23.0” (584 mm)	23.0” (584 mm)
331 —	3	15.7” (400 mm)	31.5” (800 mm)
342 —	3	21.0” (533 mm)	42.0” (1066 mm)
435 —	4	11.8” (300 mm)	35.4” (900 mm)

RECEIVER CABLE W/PLUG

- 0 —No cable
- 1 —15’ (4.5 m)
- 2 —25’ (7.6 m)
- 5 —50’ (15.2 m)
- 7 —75’ (22.8 m)
- 9 —100’ (30.4 m)

TRANSMITTER CABLE W/PLUG

- 0 —No cable
- 1 —15’ (4.5 m)
- 2 —25’ (7.6 m)
- 5 —50’ (15.2 m)
- 7 —75’ (22.8 m)
- 9 —100’ (30.4 m)

Four (4) end mount swivel brackets are included with each perimeter light beam system for mounting.

LASER ALIGNMENT TOOL—PART NO. LAT-1

A laser alignment tool is available to aid in the alignment of any perimeter light curtain system. It is particularly useful with applications involving mirrors.

The laser alignment tool includes a 9-volt battery, a mounting clip, and has a built-in circular bubble level. **This alignment tool is to be used for set up only.**

PERIMETER LIGHT BEAM INTERFACE

The perimeter light beam interfaces are available in several variations. They are available with the component furnished loose, in a plain door enclosure, or in an enclosure with the operators on the door. Depending on the requirements, compent options include terminals, fuses, a safety mointoring relay, force-guided relays, a multiple beam off/on selector switch, a power supply, a reset pushbutton, and an enclosure. Select a perimeter light beam interface from the chart on this page based on your requirements.

Perimeter light beam interfaces provide a generic tie-in to most control systems. These interfaces can supply the 24-V DC power needed to operate the perimeter light beam. The perimeter light beams provide two solid-state output signal switching device (OSSD) outputs, and since many control systems are not compatible with this type of output, interfaces are available. These units incorporate a safety monitoring relay to provide a Category 4 interface when properly integrated with the existing controls system. Some control systems require more relay contacts than are available on a safety monitoring relay, therefore, force-guided relays can be provided that will work in conjunction with the safety monitoring relays. This provides additional contacts and still maintins a Category 4 interface.

A multiple beam off/on selector switch is also an available option. This selector switch gives the option to run the machine in the setup mode without interruption from the perimeter light beam. Other safeguarding methods must be used when the permeter beam selector switch is in the off position.

If necessary, special interfaces can be provided that will show the exact tie-in of the perimeter light beam system to your control system. We will need your existing electrical control system schematics to verify that it is compliant and that it is capable of accepting a perimeter light beam tie-in. Please contact our factory for more information. Also, please contact Rockford Systems to discuss entry/exit applications to determine remote muting, sensor, and interface options.

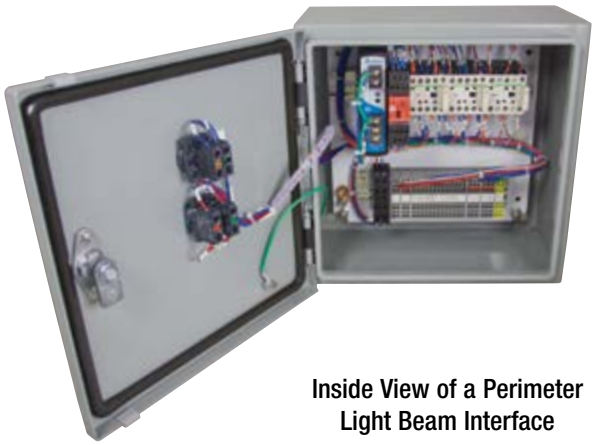

Inside View of a Perimeter Light Beam Interface

INTERFACE FOR A PERIMETER LIGHT BEAM SYSTEM							
	LRS-XXXX PART NO.						
FEATURES	**1022**	**1023**	**1024**	**1025**	**1026**	**1027**	**1028**
Terminals			X	X	X	X	X
Fuses			X	X	X	X	X
Safety Monitoring Relay	X	X	X	X	X	X	X
Force-Guided Relays (2)	X	X		X		X	X
Multiple Beam Off/ On Selector Switch						X	X
Power Supply		X			X		X
Enclosure			X	X	X	X	X
Reset Pushbtton							X

OFF/ON REMOTE OPERATOR STATION—PART NO. LLD-1236

An off/on remote operator station is available that is used in conjunction with an interface when a plain door enclosure or loose interface components are chosen. This remote operator station includes an off/on keyed selector switch in a steel 31/2” x 31/4” x 23/4” enclosure.

Perimeter Light Curtain Remote Operator Station

SINGLE BEAM SYSTEM

The single beam system is designed specifically for perimeter or auxiliary safeguarding. It can be used for safeguarding hazardous areas around machines and processes such as press feeding equipment, robotic work cells, automatic machinery work envelopes, assembly lines, conveyors, palletizers, stackers, and plastic-injection molding machines.

FEATURES

- Meets industry OSHA, ANSI, UL, IEC, and EN safety standards
- Operating ranges: Short—2.6' to 65' (.8 to 20 m)
  Long—49' to 230' (15 to 70 m)
- Number of beams—1
- Strobe-light and weld-flash immunity
- 24 ms response time
- Diagnostics with 7-segment display
- Optional external device monitoring (EDM)

The single beam system consists of a transmitter and a receiver, each with strong, durable aluminum housing. When aligned and mounted at the proper safety distance, these sensors transmit an invisible beam of light across the entryway to the hazardous area. Interruption of this light beam sends a stop signal to the machine's control. This signal is designed to stop hazardous machine motion or prevent the initiation of machine motion. The single beam system can be used in conjunction with mirrors to increase the coverage of the safeguarded area.

SINGLE BEAM TRANSMITTER AND RECEIVER DIMENSIONS

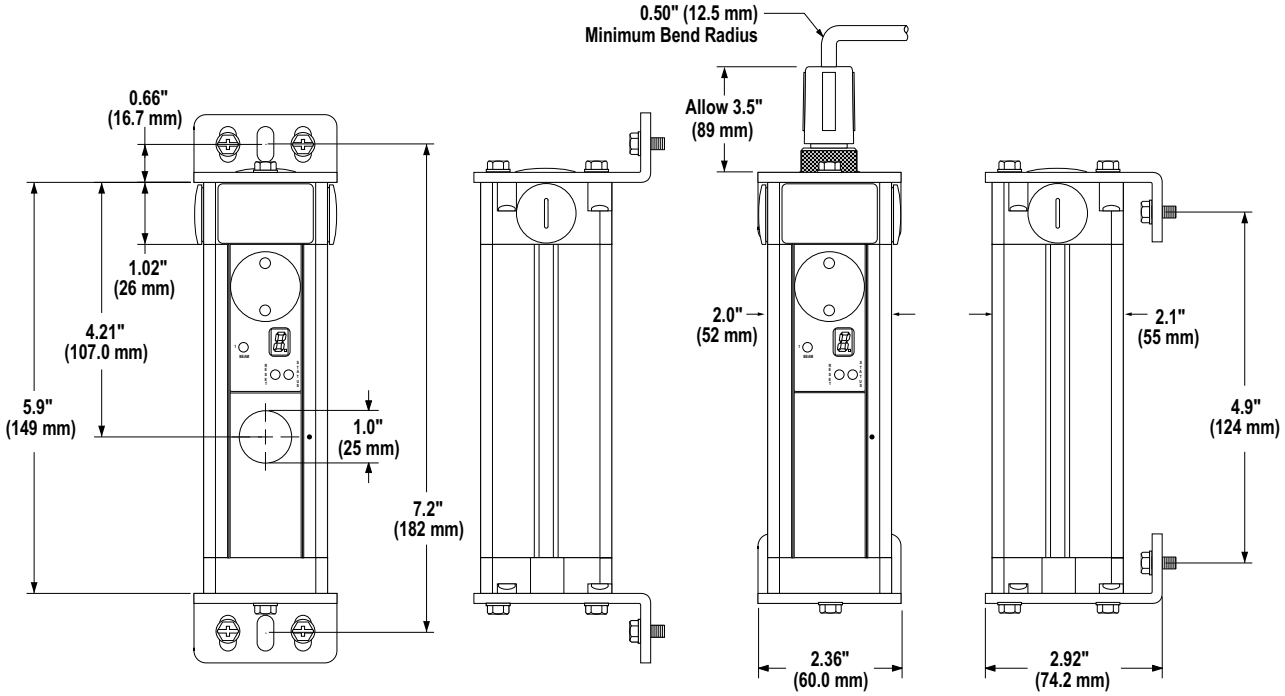

SELECTING A SINGLE BEAM SYSTEM

To determine the 6-digit configured part number for the single beam system required, follow the directions below and use the information in the **PART NUMBERING SYSTEM CHART** below.

1. The first 3 digits determines the choice of a short range single beam system or a long range single beam system.
2. The 4th digit determines the number of beams which will always be one (1).
3. The 5th digit determines the length of the transmitter cable.
4. The 6th digit determines the length of the receiver cable (can be a different length from the transmitter cable).

SAMPLE

1	2	3	4
S B L	- 1	- 2	- 5

The sample shown, Part No. SBL-1-2-5, is a long range single beam system with one (1) beam. It has a 25' (7.6 m) transmitter cable and a 50' (15.2 m) receiver cable.

SINGLE BEAM PART NUMBERING SYSTEM CHART

X X X - 1 - X - X

SINGLE BEAM SYSTEM TYPE

- SBS —Short range: 2.62' to 65.6' (0.8 m to 20 m)
- SBL —Long range: 49.2' to 229.6' (15 m to 70 m)

NUMBER OF BEAMS

- 1 —1

RECEIVER CABLE W/PLUG

- 0 —No cable
- 1 —15' (4.5 m)
- 2 —25' (7.6 m)
- 5 —50' (15.2 m)
- 7 —75' (22.8 m)
- 9 —100' (30.4 m)

TRANSMITTER CABLE W/PLUG

- 0 —No cable
- 1 —15' (4.5 m)
- 2 —25' (7.6 m)
- 5 —50' (15.2 m)
- 7 —75' (22.8 m)
- 9 —100' (30.4 m)

Four (4) end mount swivel brackets are included with each single beam system for mounting.

OFF/ON REMOTE OPERATOR STATION—PART NO. LLD-1236

An off/on remote operator station is available that is used in conjunction with an interface when a plain door enclosure or loose interface components are chosen. This remote operator station includes an off/on keyed selector switch in a steel 31⁄2" x 31⁄4" x 23⁄4" enclosure.

LASER ALIGNMENT TOOL—PART NO. LAT-1

A laser alignment tool is available to aid in the alignment of any single beam system. It is particularly useful with applications involving mirrors.

The laser alignment tool includes a 9-volt battery, a mounting clip, and has a built-in circular bubble level. This alignment tool is to be used for set up only.

S3000 SAFETY LASER SCANNER

FEATURES

- Meets industry OSHA, ANSI, UL, IEC, and EN safety standards
- 3 models to choose from—standard, advanced, and professional
- Selectable resolutions—30 mm (1.18”), 40 mm (1.58”), 50 mm (1.96”), 70 mm (2.75”), and 150 mm (5.9”)
- 190° scanning angle
- Protective field scanning range radius up to 23’ (7 m)
- Warning field scanning range radius up to 160’ (49 m)
- Minimum response time 60 ms
- Up to 8 programmable protective fields and 8 warning fields (dependent on the I/O module and application)
- Operating modes: restart interlock, restart delay, and reset
- Integrated external device monitoring (EDM)
- Warning field auxiliary output
- Simultaneous monitoring of two areas
- Multiple sampling for various ambient conditions
- LED 7-segment alignment and diagnostics display
- 2 solid-state OSSD (output signal switching device) outputs—24-V PNP outputs
- Configuration and diagnostic software (CDS)
- Easy installation

S3000 Safety Laser Scanner

S3000 Safety Laser Scanner Mounted on a Coil Processing Line

The S3000 scanner is designed to meet industry safety standards for indoor hazardous area and machinery protection, access protection, guided vehicle protection, robot stations, and irregular shaped areas. The scanner is an optical sensor that scans its surroundings in two dimensions using infrared laser beams. It sends out very short pulses of light and measures the time it takes to reflect back (time of flight measurement).

The S3000 scanner is encased in a yellow, scratch-resistant aluminum die-cast housing and has a durable polycarbonate front screen. The safety laser scanner includes the sensor head, system plug, and I/O module. The sensor head houses the opto-electronic acquisition system. The I/O module defines the functionality of the S3000 safety laser scanner, and the system plug (with the configuration memory) contains all electrical connections.

Up to eight (8) programmable warning fields and protective fields are available, depending on which scanner model is chosen. Each warning field has a non-safety output that can be interfaced to a light, PLC, display, etc., to warn of impending encroachment of a protective field. Any interruption to a protective field will cause the OSSDs to drop and initiate a stop signal to the machine control system (machine primary control elements–MPCE).

The programmable feature of the scanner eliminates the need to reprogram the scanner every time something changes within the field. For example, if something is regularly moved in and out of a field, then multiple fields can be programmed to accommodate the changes. A static input allows for a selector switch or PLC to be used to change the field sets as needed.

MOUNTING OPTIONS

The S3000 safety laser scanner can be mounted vertically or horizontally. A mounting kit (sold separately) is required. S3L-MK1 is the base mounting kit—S3L-MK2 adds on to the S3L-MK1, and S3L-MK3 adds on to S3L-MK1 and S3L-MK2. See the ordering information below.

ORDERING INFORMATION	
PART NO.	**DESCRIPTION**
S3L-MK1	Mounting Kit #1 – No Adjustment Capability
S3L-MK2	Mounting Kit #2 – Provides Vertical Adjustment (an S3L-MK1 is Required in Addition to an S3L-MK2)
S3L-MK3	Mounting Kit #3 – Provides Horizontal Adjustment (an S3L-MK1 and S3L-MK2 are Required in Addition to an S3L-MK3)

S3000 Mounting Kits

S3000 FLOOR STAND

This floor stand is designed specifically for mounting the S3000 safety laser scanner. The stand is constructed of aluminum extrusion on a steel base plate which can be bolted to the floor.

ORDERING INFORMATION	
PART NO.	**DESCRIPTION**
FKT-1093	Floor Stand for S3000 Safety Laser Scanner – 2” x 2” x 16” Extruded Aluminum Post on a 6” x 6” Steel Base Plate

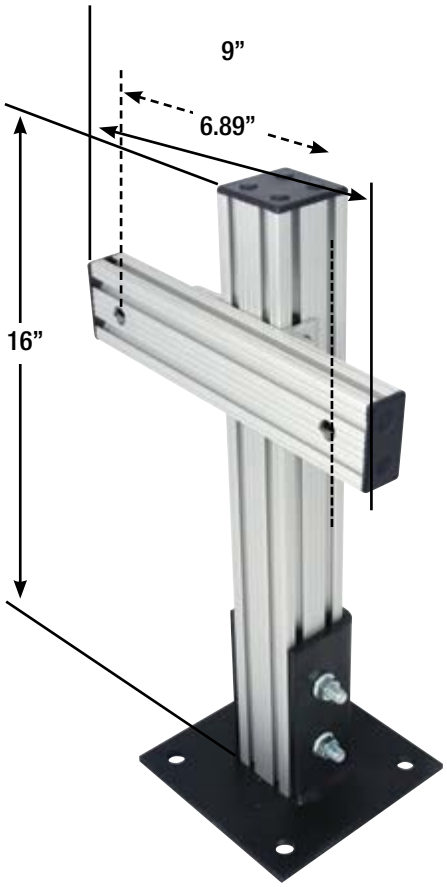

S3000 SAFETY LASER SCANNER DIMENSIONS

Side View

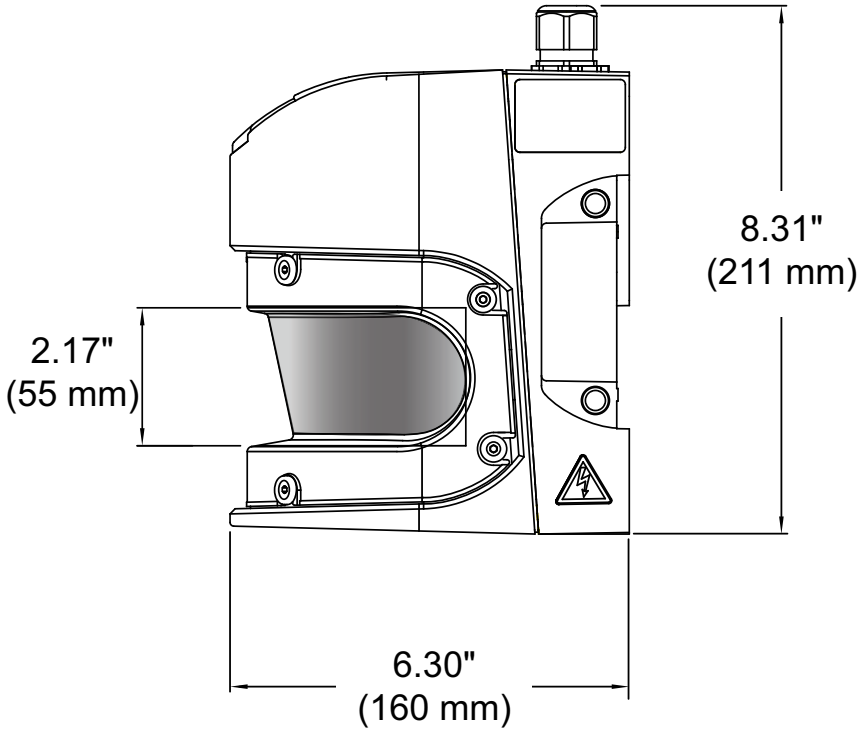

Front View

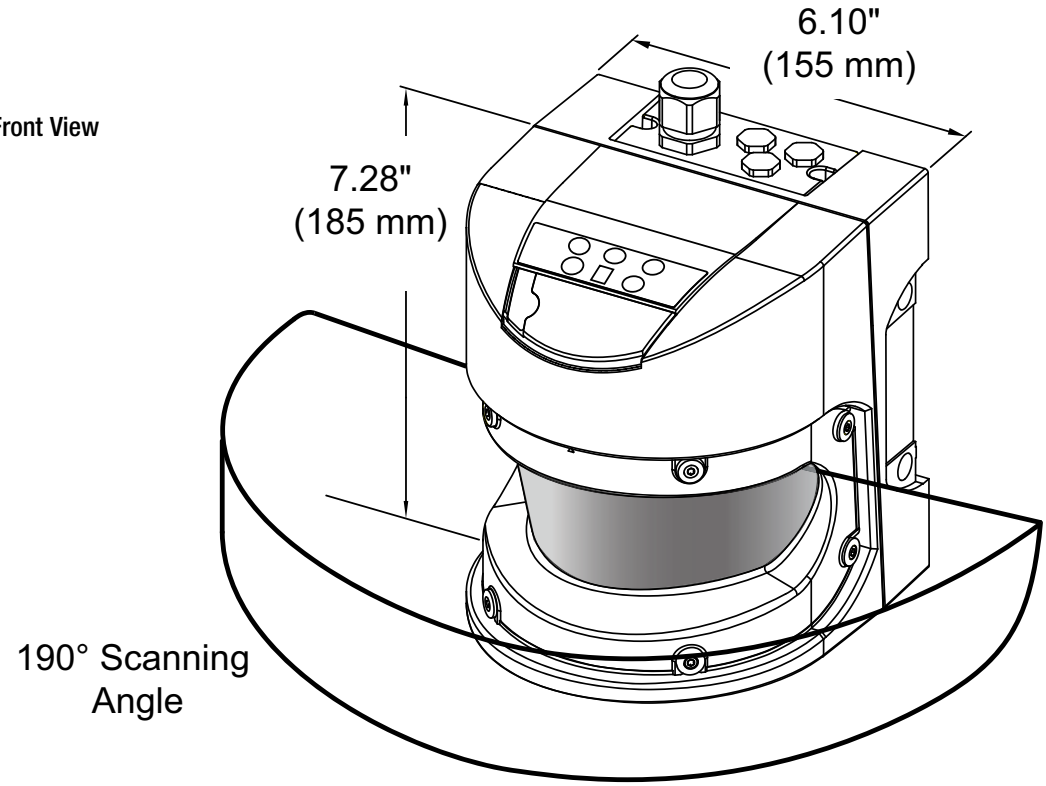

SELECTING AN S3000 SERIES SAFETY LASER SCANNER

To determine the 6-digit configured part number for the S3000 safety laser scanner required, follow the directions below and use the information in the **PART NUMBERING SYSTEM CHART** below.

1. The first 3 digits for all safety laser scanners are S3S- (for standard), S3A- (for advanced), or S3P- (for professional).
2. The 4th and 5th digits determine the safety zone scanning range.
3. The 6th digit determines the cable length with plug.
4. A configuration cable is required for connection to a PC to enable configuration. See below for Part No S3L-CC6.

SAMPLE

The sample shown, Part No. S3A-132, is an S3000 advanced safety laser scanner with a 13-foot safety zone scanning range and a 10-meter cable with plug.

S3000 SERIES SAFETY LASER SCANNER PART NUMBERING SYSTEM CHART

S 3 X - X X X

LASER SCANNER TYPE

S3S —S3000 Standard
- 1 programmable protection field
- 1 programmable warning field
- 1 monitoring case

S3A —S3000 Advanced
- 4 programmable protection fields
- 4 programmable warning fields
- 4 different monitoring cases
- 2 inputs for protective field switching

S3P —S3000 Professional
- 8 programmable protection fields
- 8 programmable warning fields
- 16 different monitoring cases
- 4 inputs for protective field switching
- 1 incremental encoder input

SYSTEM PLUG AND CABLE LENGTH

1 —5-meter cable with plug
2 —10-meter cable with plug
3 —20-meter cable with plug

SAFETY ZONE SCANNING RANGE

13 —13' (4 m)
18 —18' (5.5 m)
23 —23' (7 m)

Note: A configuration cable (Part No. S3L-CC6) is required to program the S3000 safety laser scanner—see information below.

CONFIGURATION CABLE—PART NO. S3L-CC6

At least one configuration cable is required for connecting an S3000 safety laser scanner to a PC to enable configuration. One cable can be used to configure one or more S3000 safety laser scanners.

NOTE: Please contact Rockford Systems for information on interface requirements.

TOWER LIGHT ASSEMBLIES

A tower light assembly is designed to be exceptionally bright with a long, visible indication range. This provides highly visible operator and supervisor information as to equipment status. These assemblies are extremely rugged and are built to be used in the toughest industrial environments. They are available in both 24V DC and 120V AC.

Each tower light assembly can be configured for up to five LED colors, or for up to four LED colors with an audible alarm. Each tower light assembly has a black ABS housing with polycarbonate LEDs. A standoff pipe (choose between 6" [152 mm] or 12" [304 mm]) houses a 78-inch (2-meter) connection cable that is supplied with each assembly. These tower light assemblies are completely self-contained, or can be used in conjunction with a control box (see next page). Each tower assembly is pre-assembled with no field serviceable parts.

SELECTING A TOWER LIGHT ASSEMBLY

To determine the configured part number for the tower light assembly required, follow the directions below and use the information in the **PART NUMBERING SYSTEM CHART** below.

1. Determine the voltage of the tower light assemblies—24V DC or 120V AC.
2. Determine the color, function, and position of the lights (selected from bottom to top) and/or choose an alarm and tone. If an alarm is selected, only four light positions may be chosen since the alarm will always occupy the top position.
3. Determine the standoff pipe extension length.

SAMPLE

1		2		3
TLA	-	RSGFWSYTAC	-	12

The sample shown, Part No. **TLA-RSGFWSYTAC-12**, is a 24V DC tower light assembly that has one red solid light, one green flashing light, one white solid light, and one yellow turning light (stacked from bottom to top). It also has a continuous tone alarm with a 12" (304 mm) pipe extension.

SAMPLE

1		2		3
TLZ	-	AP	-	06

The sample shown, Part No. **TLZ-AP-06**, is a 120V AC tower light assembly without any lights. It has a pulsed tone alarm with a 6" (304 mm) pipe extension.

TOWER LIGHT ASSEMBLY PART NUMBERING SYSTEM CHART

TLX-XX XX XX XX XX-XX

TOWER LIGHT ASSEMBLY

- TLA — 24 V DC Tower Light Assembly
- TLZ — 120 V AC Tower Light Assembly

Light Color and Function and/or Alarm

	Choose Color/Alarm	+	Function
Pos. 1		+	
Pos. 2		+	
Pos. 3		+	
Pos. 4		+	
Pos. 5*		+	

- R=Red
- B=Blue
- G=Green
- W=White
- Y=Yellow
- A=Alarm
- Blank=Not used

S=On Solid
F=Flashing
T=Turning (rotating)

C=Continuous tone alarm
P=Pulsed tone alarm

*Up to 5 lights without alarm
Up to 4 lights with alarm–alarm will always occupy top position

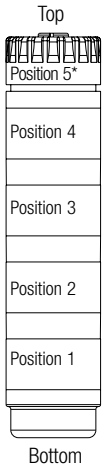

Standoff Pipe

- -- — None
- 06 — 6" (152 mm) Pipe extension
- 12 — 12" (304 mm) Pipe extension

TOWER LIGHT BRACKET— CMC569M

An optional mounting bracket for self-contained tower light assemblies is available for mounting the tower light in a convenient location. The right angle bracket is made of 12-ga. stainless steel and has curved mounting slots for versatility and orientation.

TOWER LIGHT ASSEMBLY CONTROL BOX—LLD-1631

The tower light interface box provides a convenient means of mounting and wiring the tower light. The LLD-1631 standard box comes with enough terminals to accommodate five (5) lights or four (4) lights with an alarm in the tower light assembly. This control box is approximately 8” x 6” x 6”.

Inside View of Tower Light Assembly Control Box

NO-GO INDICATOR LIGHT

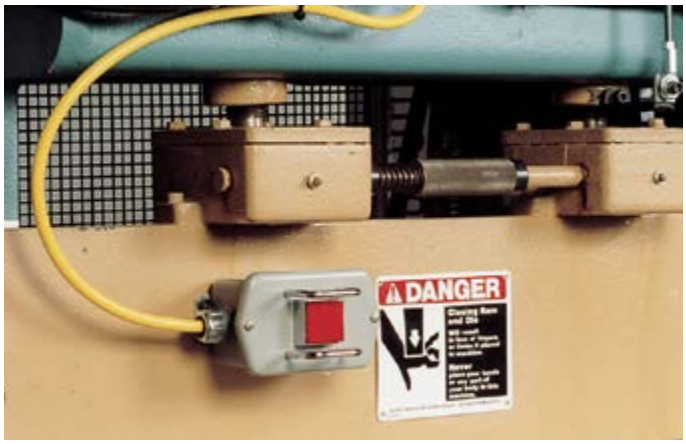

ORDERING INFORMATION	
PART NO.	DESCRIPTION
LLD-141	No-Go Indicator Light Mounting Box and Lens Projectors

Most point-of-operation light curtains will not detect workpieces that present a profile of 1/4" or less. However, if the workpiece profile becomes bowed enough to be seen in the plane of light, it will be detected.

On press brake operations, the machine will not start a stroke because the workpiece quite often protrudes through the plane of light and is detected. This becomes frustrating for operators because they have to look to the right or to the left for the red and green indicator lights on the transmitter or receiver to determine if the obstruction is detected. To avoid frustrating the operator, a large red no-go indicator light can be installed on the slide and in the peripheral sight of the operator. This light allows the operator to hold the workpiece in the correct position. At the same time, the no-go light will let them know if their hands or the workpiece is being detected by the light curtain. In some cases, the red no-go indicator light can be used to avoid channel blanking.

The red no-go indicator light has a low-profile design. It is protected from workpieces which bend into the light, and is easily wired into existing light curtain systems.

The no-go indicator light includes the light, the mounting box, and instructions on how to wire it into the light curtain control system.

TEST RODS FOR EZ-SCREEN LIGHT CURTAINS

A test rod is included with each shipment of an EZ-Screen light curtain system. When a light curtain is used for safeguarding, a test rod must be used to test the light curtain after each setup or after any maintenance work performed—refer to pages 67-68 for a sample function-testing checklist for light curtains.

ORDERING INFORMATION	
PART NO.	DIAMETER/MOS (MIN. OBJECT SENSITIVITY)
STP-13	0.55" (14 mm)
STP-14	1.18" (30 mm)
STP-3	1.75" (45 mm)

OPTIONAL MOUNTING BRACKETS FOR POINT-OF-OPERATION LIGHT CURTAIN SYSTEMS —PART NO. EZA-MBK-20

These optional mounting brackets are for use with the point-of-operation light curtain systems on pages 13-18. These brackets are designed to mount point-of-operation light curtain systems to engineered/slotted aluminum framing (for example, Rockford Systems' Ex-Al™ products). Set of two (2).

SAB-A (SWING-AWAY WITH ADJUSTABLE GUARDS) AND SAB-NA (SWING-AWAY WITH NONADJUSTABLE GUARDS) MOUNTING BRACKETS

Swing-away light curtain mounting brackets with guards are ideal for many machines, including gap-frame presses and press brakes, when the light curtain must be swung out of the way for setup, die changes, or maintenance. The light curtain transmitter and receiver are easily aligned when they are swung back into the machine operating position. The 2" square extruded-aluminum brackets include side barrier guards as shown. The nonadjustable portion of these guards can be constructed of black or yellow mesh (1⁄2" square, 16 gauge), or clear polycarbonate (3⁄16"). The lower portion of the barrier guard can be constructed of adjustable, black-oxidized steel hairpins. This allows for feeding of stock, location of chutes, etc., on the sides of the point of operation.

These guards incorporate a hinge assembly on the corner. This allows the light curtain to be swung out. This assembly can also be used to adjust the light curtain panel forward and backward to adjust for safety distance. A built-in locking pin in this assembly holds the panel in place.

Swing-away brackets and barrier guards are built to specifications and measurements provided. See the next page for the appropriate **SAB-A** or **SAB-NA** measurement form.

SAB-A MOUNTING BRACKET

Swing-Away Light Curtain Mounting Bracket with Material Feeding Segment Built Into the Guards

SAB-NA MOUNTING BRACKET

Swing-Away Light Curtain Mounting Bracket with Nonadjustable Guards

SWING-AWAY MOUNTING BRACKET SPECIFICATIONS

SAB-A

(WITH ADJUSTABLE GUARDS)

SAB-NA

(WITH NONADJUSTABLE GUARDS)

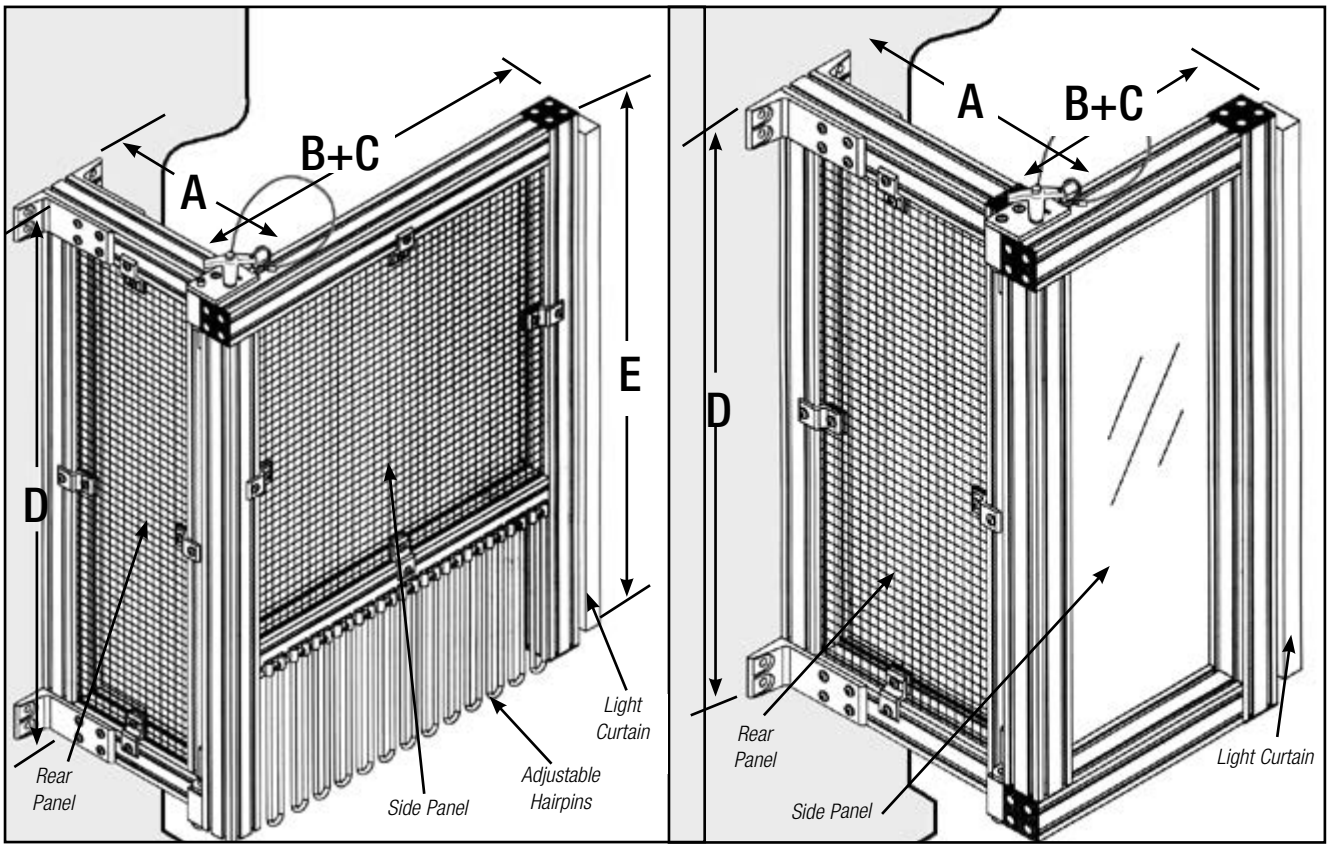

Note: B + C dimension includes safety distance. Stopping time of the machine must be determined to establish the safety distance. Please consult the factory if assistance is needed.

Select the appropriate SAB (swing-away bracket) for your application. If adjustability is required in the lower portion of the barrier guard section, select the mounting bracket **SAB-A**. If adjustability is not required, select the mounting bracket SAB-NA.

Please complete one of the measurement forms (see page 36 or 38) when ordering these brackets. The A, B, C, D, and E dimensions will be determined from the measurements supplied. Check the material type for the sides and rear panels below.

☐SAB-A

LEFT SIDE OF MACHINE	RIGHT SIDE OF MACHINE
Side Panel Material Type	
☐ Black Mesh ☐ Yellow Mesh ☐ Clear Polycarbonate	☐ Black Mesh ☐ Yellow Mesh ☐ Clear Polycarbonate
Rear Panel Material Type	
☐ Black Mesh ☐ Yellow Mesh ☐ Clear Polycarbonate	☐ Black Mesh ☐ Yellow Mesh ☐ Clear Polycarbonate

☐SAB-NA

LEFT SIDE OF MACHINE	RIGHT SIDE OF MACHINE
Side Panel Material Type	
☐ Black Mesh ☐ Yellow Mesh ☐ Clear Polycarbonate	☐ Black Mesh ☐ Yellow Mesh ☐ Clear Polycarbonate
Rear Panel Material Type	
☐ Black Mesh ☐ Yellow Mesh ☐ Clear Polycarbonate	☐ Black Mesh ☐ Yellow Mesh ☐ Clear Polycarbonate

MEASUREMENT FORM FOR MODELS SAB-A AND SAB-NA SWING-AWAY BRACKETS

Company _____ Address _____

_____

City _____ State _____ ZIP _____

Attention _____ Rep. _____

Machine Mfr. and Model No. _____ Machine No. _____

Measured By _____

Determine which mounting brackets are required: SAB-A (with adjustable barrier guards) or SAB-NA (with nonadjustable barrier guards). Check the bracket type required and complete measurements for the machine where brackets will be applied.

☐ SAB-A*

☐ SAB-NA*

PRESS APPLICATION

Top View

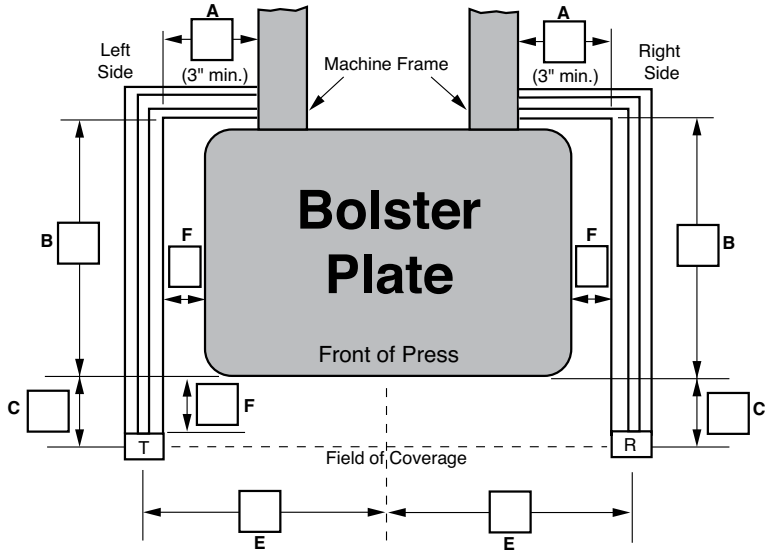

Right-Side View

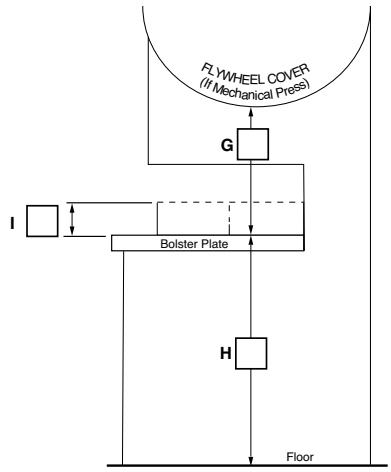

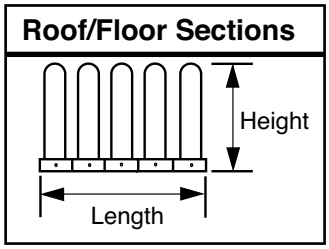

MEASURING INSTRUCTIONS

Check type of press:

☐ Mechanical ☐ Hydraulic ☐ Other

Size of light curtain: _____"

A: Enter dimensions from mounting point on press frame to inside of swing-away mounting bracket. (Be sure bracket extending forward will clear bolster and any obstruction on the side of the press frame.)

B: Enter dimension from front side of machine frame mounting bracket to front edge of bolster plate (assuming nearest pinch point to operator is at the front edge of bolster).

C: Enter the minimum safety distance determined by the safety distance formula. Stopping time of the press must be determined to establish safety distance.

D: Enter the panel height for the guard on the left and right side of machine.

Left_____" Right_____"

Note: The light curtain mounting extrusion will be a minimum of 8" longer than the light curtain field of coverage.

E: If roof section(s) are required, enter E dimension(s) (height) and provide length of roof section(s):
Left_____" Right_____"

F: If floor section(s) are required, enter F dimension(s) (height) and provide length of floor section(s):
Left_____" Front_____" Right_____"

G: If hairpins are required on side panel extending upward, enter G dimension (height) above the guard to the flywheel cover and provide length _____".

H: Height from floor to top of bolster.

I: Maximum feedline height (used to determine hairpin length if adjustable brackets).

Notes:

* 1⁄2" square black mesh will be furnished in the nonadjustable portion of the assembly unless otherwise specified in Notes section above.

Precautions should be taken when applying light curtains for point-of-operation safeguarding. Be sure that someone cannot pass through or stand undetected between the plane of light and the hazard when a light curtain is mounted in a vertical position. If a light curtain must be mounted in this manner due to the safety distance requirements or because of the configuration of the machine, be sure that supplemental safeguarding is provided to safeguard this pass-through area. Examples of supplemental safeguarding include a horizontally mounted light curtain, single-beam devices, guards, or pressure-sensitive safety mats on the floor.

MEASUREMENT FORM FOR MODELS SAB-A AND SAB-NA SWING-AWAY BRACKETS

Company _____ Address _____

_____

City _____ State _____ ZIP _____

Attention _____ Rep. _____

Machine Mfr. and Model No. _____ Machine No. _____

Measured By _____

Determine which mounting brackets are required: SAB-A (with adjustable barrier guards) or SAB-NA (with nonadjustable barrier guards). Check the bracket type required and complete measurements for the machine where brackets will be applied.

☐ SAB-A*

☐ SAB-NA*

PRESS BRAKE APPLICATION

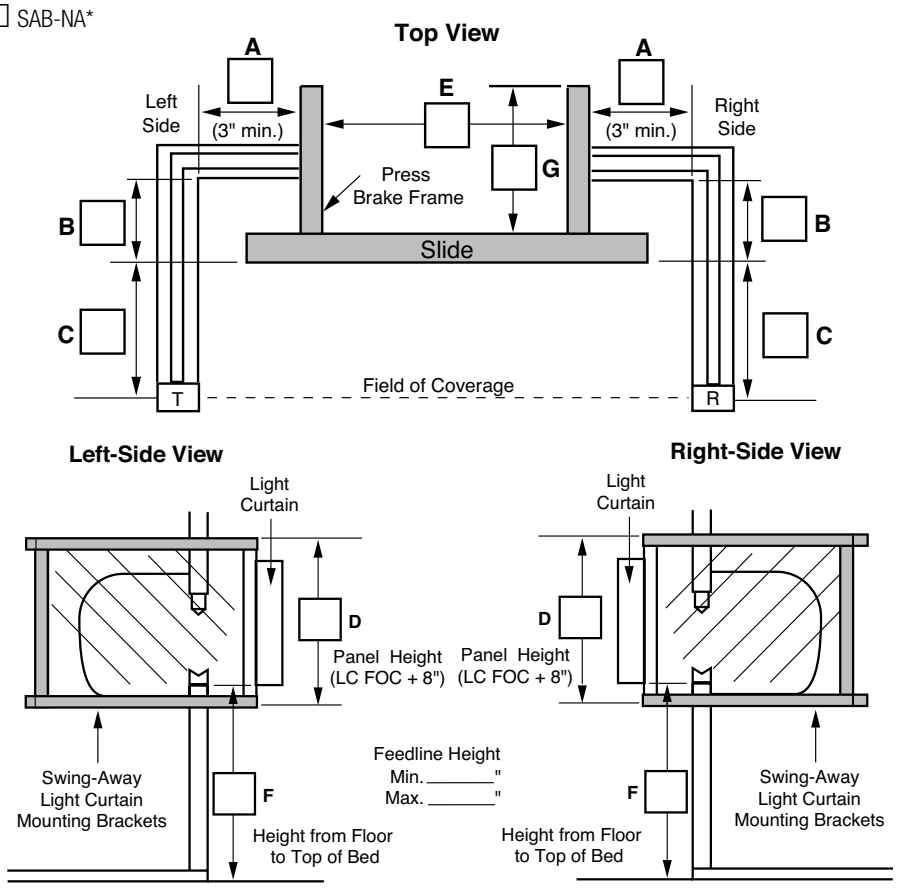

Notes:

** ½" square black mesh will be furnished in the nonadjustable portion of the assembly unless otherwise specified in Notes section above.*

Precautions should be taken when applying light curtains for point-of-operation safeguarding. Be sure that someone cannot pass through or stand undetected between the plane of light and the hazard when a light curtain is mounted in a vertical position. If a light curtain must be mounted in this manner due to the safety distance requirements or because of the configuration of the machine, be sure that supplemental safeguarding is provided to safeguard this pass-through area. Examples of supplemental safeguarding include a horizontally mounted light curtain, single-beam devices, guards, or pressure-sensitive safety mats on the floor.

MEASURING INSTRUCTIONS

Check type of press brake:

☐ Mechanical

☐ Air Clutch

☐ Other

Size of light curtain: _____"

A: Enter dimensions from mounting point on machine frame to inside of swing-away bracket. (Be sure bracket extending forward will clear slide.)

Note: Left and right side dimensions may be different due to an extension on one end of the slide.

B: Enter dimension from front side of machine frame mounting bracket to front of slide or bed.

Note: Left and right side dimensions may be different due to available mounting surfaces on side of machine.

C: Enter the minimum safety distance determined by the safety distance formula. Stopping time of the machine must be determined to establish safety distance.

D: Enter the panel height for the guards on the left and right end of the machine.

Note: The light curtain mounting extrusion will be a minimum of 8" longer than the light curtain field of coverage.

E: Enter inside frame dimension at the rear of machine.

F: Enter height from floor to top of bed. Also provide maximum and minimum feedline height.

G: Enter dimension from back of the slide to rear of machine.

If floor/roof sections are required, please read the instructions (E & F) on the previous page and provide dimensions in the Notes section above.

STATIONARY MOUNTING BRACKET SPECIFICATIONS FOR MODELS: SB-2, SB-3 OBI, SB-3 SS, SB-3 SSG, SB-5, AND SB-5 G

If more than one machine is to be measured, please make copies of this page.

Company _____ Address _____

City _____ State _____ ZIP _____

Attention _____ Rep. _____

Machine Mfr. and Model No. _____ Machine No. _____

Measured By _____ _____

Check the required stationary bracket. If the standard dimensions specified here do not fit your application, indicate the dimensions required. The A dimension for all brackets should be a minimum of 8" more than the light curtain field-of-coverage height.

☐ **SB-2** — 2-Section Mounting Bracket (2-Dimensional)

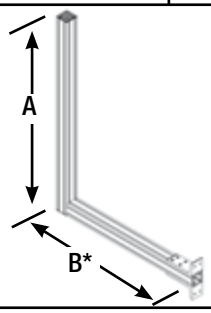

	Std	Req'd
A	32"	
B*	20"	

☐ **SB-3 OBI** — 3-Section Mounting Bracket (3-Dimensional)

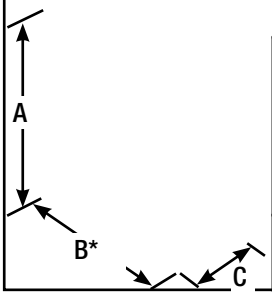

	Std	Req'd
A	32"	
B*	24"	
C	12" (3" Min.)	

☐ **SB-3 SS** — 3-Section Mounting Bracket (2-Dimensional)

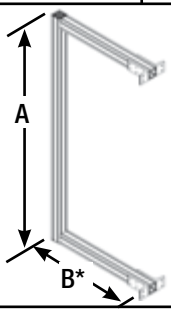

	Std	Req'd
A	44"	
B*	12"	

☐ **SB-3 SSG** — 3-Section Mounting Bracket (2-Dimensional) With Guards

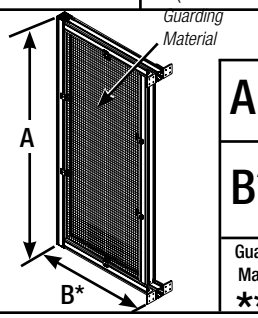

	Std	Req'd
A	44"	
B*	12"	
Guard Mat'l **	Blk	

☐ **SB-5** — 5-Section Mounting Bracket (3-Dimensional)

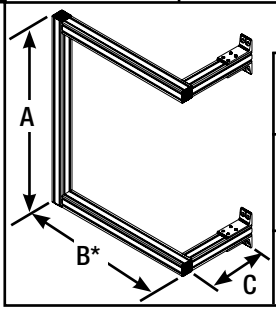

	Std	Req'd
A	36"	
B*	24"	
C	12" (3" Min.)	

☐ **SB-5 G** — 5-Section Mounting Bracket (2-Dimensional) With Guards

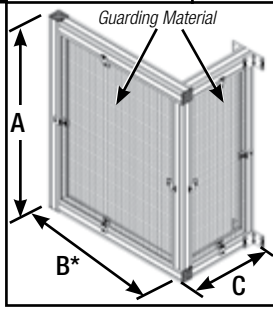

	Std	Req'd
A	36"	
B*	24"	
C	12" (3" Min.)	
Guard Mat'l **	Blk	

*B dimension must include safety distance. Stopping time of the machine must be determined to establish the safety distance. Please consult the factory if assistance is needed.

****CHOICES OF GUARDING MATERIAL**: ½" square or 1" square black (Blk) or yellow (Y) mesh, or polycarbonate (PC). ½" square black mesh is furnished as standard guarding material unless otherwise specified.

STATIONARY MOUNTING BRACKETS

These stationary light curtain mounting brackets are economical, heavy-duty, and versatile. Their design allows them to be tailored to each individual machine. They are available in two-, three-, or five-section assemblies. They are ideal for applications where side barriers (guards) will be fabricated by the user or provided separately. Two of the stationary light curtain mounting brackets can also be furnished with integral guarding material. See the measurement form on the previous page.

The two-section and three-section (SS) brackets can be used whenever mounting brackets can be installed on the front surface of the machine. The three-section (OBI) should be used when the brackets must be mounted to the sides of the machine (see photo). The five-section can also be mounted on the sides of the machine, at both the top and the bottom for greater stability. All of these brackets are designed for use on gap-frame presses or press brakes.

These brackets are constructed of 2" square extruded aluminum which attach to the machine with L-shaped mounting feet. The brackets are fastened to the mounting feet with T-nuts and cap screws. Each mounting foot has two holes which are used for mounting the bracket to the machine. Fasteners are included with each assembly.

3-Section (OBI) Stationary Light Curtain Mounting Bracket (barrier guard has been removed from machine for photo)

Floor Stand With Light Curtain Transmitter (Light Curtain Sold Separately)

Floor Stand With Mirror (Mirror Sold Separately)

When light bars (transmitter or receiver) cannot be conveniently mounted to the machine, a floor stand can be furnished. Floor stands can also be used when safeguarding large work envelopes or perimeter areas. Mirrors or single-beam devices can be attached to the floor stand when the application requires multiple-sided safeguarding. Light bars, single-beam devices, or mirrors can easily be adjusted up or down on any side of the upright extruded-aluminum stand.

This floor stand assembly consists of a 6' length of 2" square extruded aluminum, one base, and two right-angle brackets with fasteners. The base has four holes for permanent attachment to the floor with bolts (not furnished). Other floor stand sizes are available. Please consult the factory.

MIRRORS FOR LIGHT CURTAINS

Mirrors can be used with the light curtain to protect more than one side of the point of operation or work envelope. The mirrors can help protect two, three, and even four sides of the point of operation or perimeter area (see next page). They are usually mounted on a 45° angle at each corner of the area to be safeguarded. Mounting hardware is provided which can be used with the floor stand illustrated on the previous page, or with the SAB-LC/M bracket illustrated on page 39. Shock and vibration isolation mounting fasteners are also provided with each mirror.

The mirror frame is constructed of 11/2" square aluminum extrusion with a rubber gasket. This gasket protects the mirror from machine vibration and shock load.

ORDERING INFORMATION	
PART NO.	**DESCRIPTION OF MIRROR**
KTR-226	7" Field of Coverage
KTR-227	12" Field of Coverage
KTR-228	16" Field of Coverage
KTR-229	18" Field of Coverage
KTR-230	21" Field of Coverage
KTR-231	24" Field of Coverage
KTR-232	28" Field of Coverage
KTR-233	35" Field of Coverage
KTR-234	36" Field of Coverage
KTR-235	42" Field of Coverage
KTR-236	48" Field of Coverage
KTR-237	56" Field of Coverage

Special-size mirrors are available upon request.

ADJUSTABLE MIRROR MOUNTING BRACKET —PART NO. MMB-F

Adjustable mirror mounting brackets are available for mounting mirrors to floor stands. These brackets are designed to provide easier alignment between light curtains and mirrors. Each adjustable mirror mounting bracket consists of two pieces of 1" x 2" extruded aluminum (48" long) connected by a rotating corner bracket. Please contact Rockford Systems if the standard dimension does not meet your requirements.

Adjustable Corner Bracket Provides Easy Alignment

LIGHT CURTAIN AND MIRROR SWING-AWAY MOUNTING BRACKETS (PART NO. SAB-LC/M)

These brackets can be used on a variety of machines which require two-sided or three-sided light curtain protection. One light curtain and one mirror provide two-sided protection; one light curtain and two mirrors provide three-sided protection (see illustration).

The left and right sides of these brackets have the ability to adjust in both directions. This provides flexibility for different production runs so the light curtain can always be mounted at the proper safety distance.

The assembly for **three-sided** protection consists of the brackets on the left and right side plus the rear barrier guards. One light curtain and two mirrors (see previous page for mirror part numbers) must be ordered separately.

The assembly for **two-sided** protection consists of one left-side bracket or one right-side bracket. Please specify at time of order. One light curtain and one mirror must be ordered separately. One floor stand or one light curtain mounting bracket is also required to mount the other light bar. See pages 32-40 for brackets, floor stands, and mirrors.

This drawing is for illustrative purposes only.

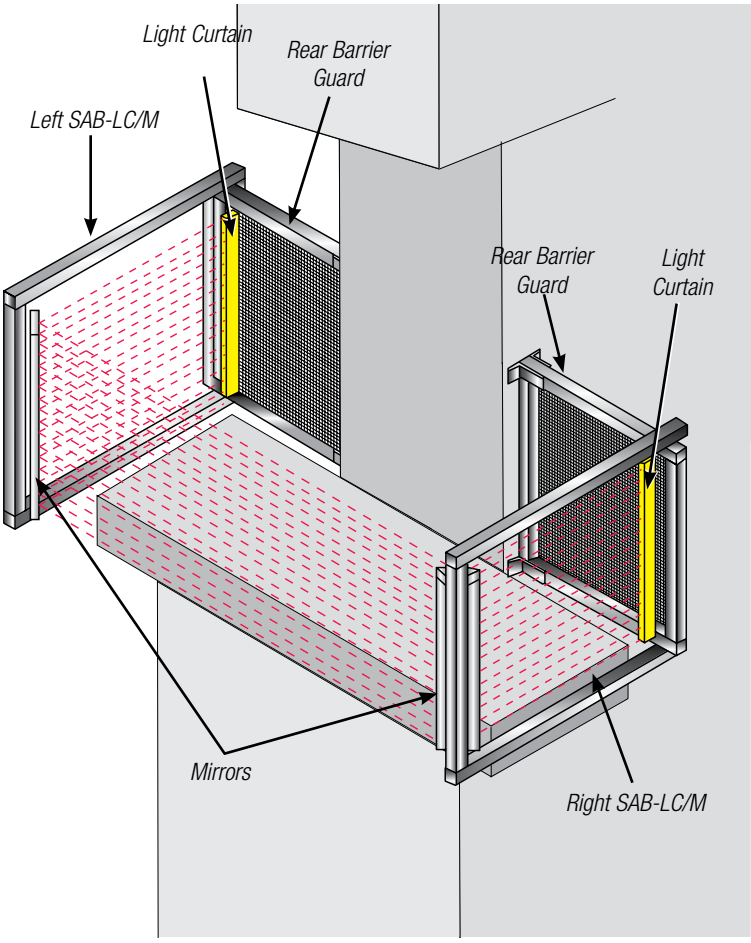

Three-Sided Application With SAB-LC/M Mounting Brackets

TWO-HAND CONTROL

Two-hand control can be used as a safeguarding device in the single-stroke mode of operation on part-revolution clutch presses and hydraulic press and press brakes.

There are many requirements that must be met before two-hand control can be used as a point-of-operation safeguard. These requirements are located in OSHA 29 CFR 1910.217 and ANSI B11.1, B11.2, B11.3, and B11.19. We have referenced the following paragraphs for your convenience:

OSHA

(c)(3)(i) Point-of-operation devices shall protect the operator by:

(e) Requiring application of both of the operator's hands to machine operating controls and locating such controls at such a safety distance from the point of operation that the slide completes the downward travel or stops before the operator can reach into the point of operation with his hands;

(c)(3)(vii) The two-hand control device shall protect the operator as specified in paragraph (c)(3)(i)(e) of this section.

(a) When used in press operations requiring more than one operator, separate two-hand controls shall be provided for each operator, and shall be designed to require concurrent application of all operator controls to activate the slide. The removal of a hand from any control button shall cause the slide to stop.

(b) Each two-hand control shall meet the construction requirements of paragraph (b)(7)(v) of this section.

(c)The safety distance (Ds) between each two-hand control device and the point of operation shall be greater than the distance determined by the following formula:

Ds = 63 inches/second x Ts where:

Ds = minimum safety distance (inches);

63 inches/second = hand speed constant; and

Ts = stopping time of the press measured at approximately 90° position of crankshaft rotation (seconds).

(d) Two-hand controls shall be fixed in position so that only a supervisor or safety engineer is capable of relocating the controls.

(b)(7)(v) Two-hand controls for single stroke shall conform to the following requirements:

(a) Each hand control shall be protected against unintended operation and arranged by design, construction, and/or separation so that the concurrent use of both hands is required to trip the press.

(b) The control system shall be designed to permit an adjustment which will require concurrent pressure from both hands during the die closing portion of the stroke.

(c) The control system shall incorporate an antirepeat feature.

(d) The control system shall be designed to require release of all operator hand controls before an interrupted stroke can be resumed.

ANSI

The following formula is used to compute the minimum safety distance (Ds) on mechanical power presses to meet the ANSI (American National Standards Institute) B11.1 press safety standard:

Ds = K x (Ts + Tc + Tr + Tspm) where:

K = Hand speed constant (63 inches/second)

Ts = Stop time of equipment measured at the final control element

Tc = Response time of the control system

Tr = Response time of the two-hand control device and its interface

Tspm = Additional time allowed for the stopping performance monitor to compensate for variations in normal stopping time

Dpf = The added distance due to the depth penetration factor. Note: If the channel blanking feature is used on light curtains, additional safety distance must be enforced based on the number of channels blanked.

When determining the safety distance, a portable or built-in stop-time measuring unit must be used to check the stopping time (Ts) of the machine. Please see pages 10 and 11 for details on a portable STM (stop-time measurement) device.

The application of any safeguarding device, the requirements of proper machine interface, as well as the safety distance formulas may be difficult to understand and apply. When any of these safeguarding devices detailed in this section are a consideration, these factors must be evaluated. To help understand how to apply these devices, we offer monthly safeguarding seminars to educate the employer/user on the safety requirements. See pages 74 through 75 for more details on our seminars. For a seminar schedule or for additional details, please use the address, phone or fax number, e-mail address, or Web site on the back cover of this catalog.

ALL-IN-ONE TWO-HAND CONTROL

The all-in-one two-hand control is a NEMA 12 control box with a control module, two relays, a terminal strip, and two buttons. Everything in the control box is prewired and ready for the user to bring wires in from the machine actuator.

FEATURES

- Preset time for concurrent operation of the buttons
- Buttons must be maintained (actuated) during hazardous portion of the cycle
- Nonresumption of an interrupted cycle
- Provides control reliability of the two-hand control portion of the control system
- Compact design for ease in mounting and can be easily applied to small machines or devices
- Choice of control modules or control monitor and actuating buttons
- Available in 24 V DC or 115 V DC
  (control monitor available in 115 V AC only)

All-In-One Two-Hand Control With Banner Buttons

The all-in-one two-hand control can be applied to most any machine or device that is pneumatically, hydraulically, or electrically operated that is usually manually fed. These machines or devices include small presses, stakers, riveters, and assembly machines. The all-in-one two-hand control can be used as a point-of-operation safeguarding device **as long as it is located at the proper safety distance**. For more information on two-hand control or two-hand trip, see pages 42 and 45-46. See the chart on the next page for selecting the proper two-hand control part number.

All-In-One Two-Hand Control with Allen-Bradley (A-B) Buttons on Sides and Emergency-Stop Button on Front

For information on mechanical and hydraulic power press and press brake controls, please call us toll-free at 1-800-922-7533, or visit our Web site at www.rockfordsystems.com.

SELECTING AN ALL-IN-ONE TWO-HAND CONTROL

To determine the 6-digit configured part number for the two-hand control required, follow directions 1-5 below and use the information in the **PART NUMBERING SYSTEM CHART** below.

1. The first 2 digits for all two-hand controls are TH.
2. The 3rd digit determines the type of two-hand control provided.
3. The 4th digit determines the type of run button, if provided, on the control enclosure. Zero (0) indicates no run buttons provided.
4. The 5th digit determines the type of emergency-stop button, if provided. Zero (0) indicates no emergency button provided.
5. The 6th digit is for the operating voltage existing at the machine.

TWO-HAND CONTROL PART NUMBERING SYSTEM CHART

TH X - X X - X

CONTROL

- TH —Two-Hand Control

TWO-HAND CONTROL (RUN BUTTONS ON SIDES OF ENCLOSURE)

- A —A-B Control Module
- B —Banner Control Module

RUN BUTTON OPERATOR TYPE

- 0 —Remotely Located
- 1 —Rees Black Palm Buttons With Rockford Systems Guards
- 2 —A-B Articulated Palm Buttons With Guards
- 3 —IDEC Green Push Button With Guards
- 4 —A-B Zero-Force Touch Buttons With Guards (90-264 V AC)
- 5 —Opto-Touch Buttons With Guards (20-30 V AC/DC)
- 6 —Square D Mushroom Push Buttons With Guards
- 7 —Rees Chrome Light-Push Palm Buttons With Rockford Systems Guards
- 8 —Ergonomic Safeball Palm Button

EMERGENCY-STOP TYPE (ON FRONT OF ENCLOSURE)

- 0 —None
- 1 —Rees Red Palm Button—Latch-Out Type
- 2 —Red 40 mm Two-Position—Twist-to-Return Type

OPERATING VOLTAGE AT MACHINE

- 0 —115 V AC
- 1 —24 V DC
- 2 —Line Voltage—Includes Multi-Tap Transformer

Rees Black Palm Button With RSI Guard

A-B Articulated Palm Button With A-B Guard

IDEC Button With Guard

A-B Zero-Force Touch Button With Guard

Opto-Touch Button With Guard

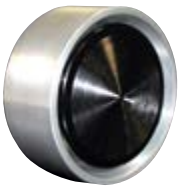

Mushroom Push Button With Guard (SQ-D)

Rees Chrome Light-Push Button With RSI Guard

Ergonomic Safeball Palm Button

Rees Red E-Stop Button—Latch-Out

Red Two-Position E-Stop —Twist-to-Return

All buttons have 1 NO and 1 NC contact arrangement.

TWO-HAND TRIP

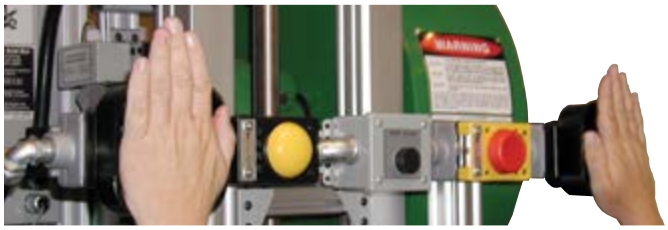

Note: There are two (2) possible applications for two-hand trip on full-revolution-clutch presses: to initiate a press cycle only, or as a method of safeguarding the point of operation for operators. In both instances, OSHA has established certain requirements. Applicable ANSI standards can also be referenced for two-hand trip.

(1) TWO-HAND TRIP

—USED AS A METHOD OF INITIATING A PRESS CYCLE ONLY

F(b)(6)

(i) A two-hand trip shall have the individual operator's hand controls protected against unintentional operation and have the individual operator's hand controls arranged by design and construction and/or separation to require the use of both hands to trip the press and use a control arrangement requiring concurrent operation of the individual operator's hand controls.

(ii) Two-hand trip systems on full-revolution-clutch machines shall incorporate an antirepeat feature.

(iii) If two-hand trip systems are used on multiple- operator presses, each operator shall have a separate set of controls.

This description covers the use of two-hand trip as an initiating means only, to obtain a press cycle. It does not provide any type of point-of-operation safeguarding. Some other properly applied and installed guard or device must also be provided in accordance with OSHA 29 CFR 1910.217(c).

(2) TWO-HAND TRIP—USED AS A METHOD OF SAFEGUARDING THE POINT OF OPERATION.

TWO-HAND TRIP

(c)(3)(i) Point-of-operation devices shall protect the operator by:

(e) Requiring application of both of the operator's hands to machine operating controls and locating such controls at such a safety distance from the point of operation that the slide completes the downward travel or stops before the operator can reach into the point of operation with his hands;

(c)(3)(viii) The two-hand trip device shall protect the operator as specified in paragraph (c)(3)(i)(e) of this section.

(a) When used in press operations requiring more than one operator, separate two-hand trips shall be provided for each operator, and shall be designed to require concurrent application of all operator controls to activate the slide.

(b) Each two-hand trip shall meet the construction requirements of paragraph (b)(6) of this section.

(c) The safety distance (Dm) between the two-hand trip and the point of operation shall be greater than the distance determined by the following formula:

D_m = 63 inches/second x Tm where:

D_m = minimum safety distance (inches);

63 inches/second = hand speed constant; and

T_m = the maximum time the press takes for the die closure after it has been tripped (seconds). For full-revolution-clutch presses with only one engaging point, Tm is equal to the time necessary for one-and-one-half revolutions of the crankshaft. For full-revolution-clutch presses with more than one engaging point, Tm shall be calculated as follows:

$$T_m = \left[1/2 + \frac{1}{\text{Number of engaging points per revolution}}\right] \times \text{time necessary to complete one revolution of the crankshaft (seconds)}$$

Note: See chart (next page) for easy reference when applying two-hand trip on full-revolution presses.

(d) Two-hand trips shall be fixed in position so that only a supervisor or safety engineer is capable of relocating the controls.

When applying two-hand trip to meet the requirements for a point-of-operation safeguarding device, make sure the buttons are located on the press so they are at least the minimum safety distance required by the preceding OSHA formula. Refer to the chart on the next page.

This means the palm buttons must be located far enough away so that after the press is tripped and the operator releases one or both palm buttons, the operator cannot "beat the ram" or reach into the point of operation or other pinch points before the dies close.

TWO-HAND TRIP SAFETY DISTANCE CHART

To establish the proper safety distance for two-hand trip on full-revolution-clutch presses, determine the speed of the press in SPM (strokes per minute) when running in the continuous mode and the number of engagement points in the clutch mechanism. Then determine the ***Safety Distance*** *from the following chart.*

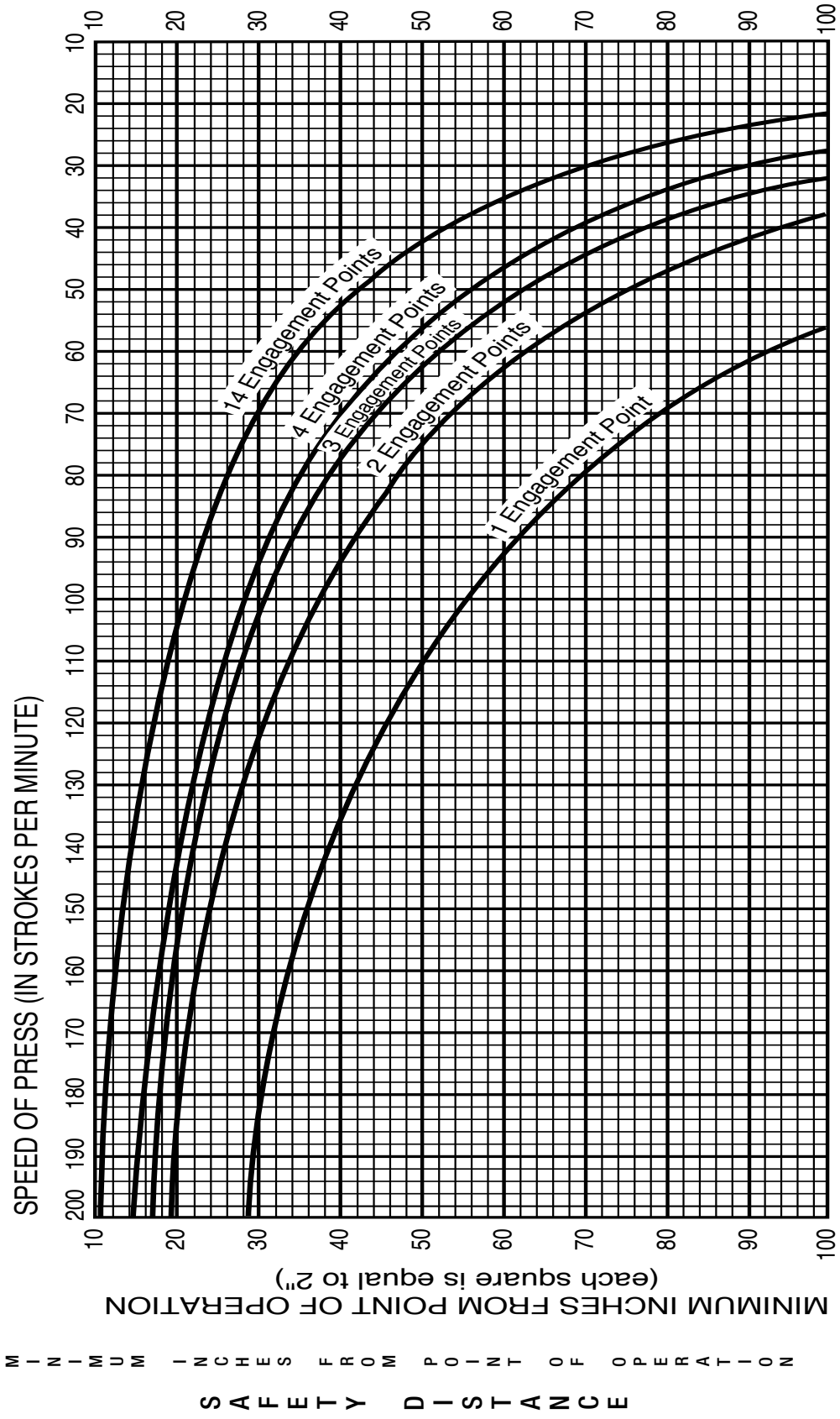

Each square is equal to 2" of safety distance.

1, 2, 3, 4, and 14 engagements points in the clutch mechanism are the most common. Machines with other engagement points may exist.

GATE OR MOVABLE BARRIER DEVICE

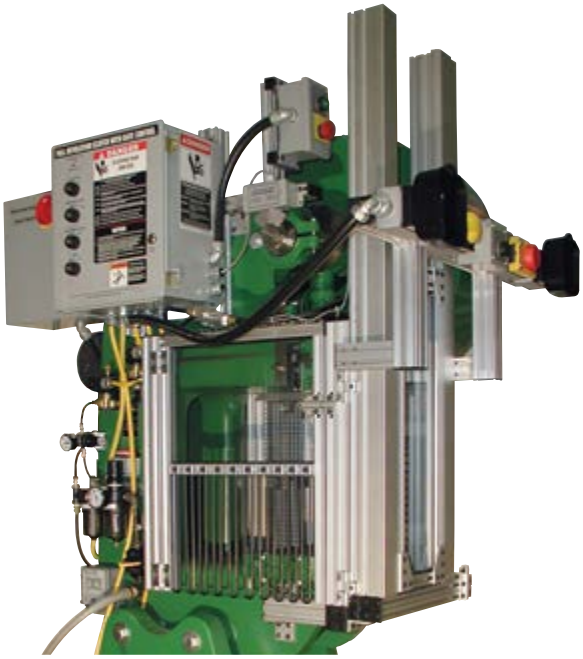

Example of a Type A Gate Package

INTRODUCTION

Why use a gate device? According to the OSHA and ANSI standards, "operators must be prevented from inadvertently placing their hands or any other body parts in the point of operation during the die-closing portion of the press stroke." The movable gate device uses a proven method of placing a physical barrier between the operator and the point-of-operation hazard during the die-closing portion of the press stroke.

Other advantages of gate devices include the following:

1. Operators are not physically attached with wristlets to the machine as they are when using a pullback or restraint device. This means operator resistance is minimized because of the nonrestrictive design allowing more freedom of movement.
2. These devices protect other employees in the machine area.
3. A foot switch can be used to actuate the press. This minimizes stress to the hands and arms which can be caused by palm buttons.

Two types of gates are available. The first is a type A gate. It protects the operator during the entire machine cycle. This means the gate will not open until after the machine's cycle is complete and stopped (usually in the up position). Type A gates are the only gates that should be used on full-revolution-clutch presses.

The second is a type B gate. It protects the operator during the downstroke only. The gate can open after the hazardous portion of the cycle has passed. Both type A and B gates can be used on part-revolution-clutch machines, hydraulic presses, and other cyclic machines where material is being manually fed.

TYPE A GATE SEQUENCE OF OPERATION

When the actuating means (palm buttons or foot switch) is operated, air pressure is released from the bottom of the gate-operating cylinder. This allows the gate to descend by gravity. Once the gate is fully down, a gate-down proximity switch senses this and the machine is allowed to make a cycle. If the gate cannot complete its downward travel, this gate-down proximity switch will not sense the gate and will prevent a machine cycle.

If the actuating means is released before the machine starts its cycle, the gate returns to the full open position with a type A gate. When the machine is actually making a cycle, air pressure is applied to the top of the gate-operating cylinder which holds the gate down and prevents it from being raised until the machine has completed its cycle. If the machine malfunctions and does not stop at the end of a normal cycle, the gate remains in the closed position.

According to ANSI (see next page), the gate must open after every cycle in order to reset the antirepeat system. If this does not happen, the machine will not make another stroke. To accomplish this, the gate control requires a signal from the machine at the open position. This signal is normally obtained from a photo-sensor or limit switch operated by a cam. Actuation of the limit switch is accomplished by the rotation of the crankshaft or any other member of the machine which makes one cycle or oscillates along one axis every stroke.

When a type A gate package is furnished for a full-revolution-clutch machine, the top-dead-center signal is provided by a limit switch assembly.

TYPE B GATE SEQUENCE OF OPERATION

The type B gate operates in a similar manner as the type A gate. When the actuating means (palm buttons or foot switch) is operated, air pressure is released from the bottom of the gate-operating cylinder. This allows the gate to descend by gravity. Once the gate is fully down, a gate-down proximity switch senses this and the machine is allowed to begin the cycle. If the gate cannot complete its downward travel, this gate-down proximity switch will not sense the gate and will prevent a machine cycle.

TYPE B GATE SEQUENCE OF OPERATION (CONTINUED)

If the actuating means is released before the machine starts its cycle, the gate returns to the full open position. When the machine is actually making a cycle, air pressure is applied to the top of the gate-operating cylinder which holds the gate down and prevents it from being raised until the hazardous portion of the cycle has passed.

The gate must open every cycle in order to reset the antirepeat system. The sequence for this is the same as for the A gate described on the previous page.

OSHA AND ANSI REQUIREMENTS FOR POWER PRESSES

The OSHA requirements for gate or movable barrier devices are located in 29 CFR 1910.217(c)(3)(i) as follows:

(c)(3)(i) Point-of-operation devices shall protect the operator by:

(f) Enclosing the point of operation before a press stroke can be initiated, and maintaining this closed condition until the motion of the slide has ceased; or

(g) Enclosing the point of operation before a press stroke can be initiated, so as to prevent an operator from reaching into the point of operation prior to die closure or prior to cessation of slide motion during the downward stroke.

(c)(3)(ii) A gate or movable barrier device shall protect the operator as follows:

(a) A Type A gate or movable barrier device shall protect the operator in the manner specified in paragraph (c)(3)(i)(f) (above) of this section, and

(b) A Type B gate or movable barrier device shall protect the operator in the manner specified in paragraph (c)(3)(i)(g) (above) of this section.

Note: OSHA states that the gate must enclose the point of operation. The gates illustrated are furnished as a single panel only, allowing access to the point of operation. Other guarding material is required to safeguard the sides and back of the point of operation. Complete the proper measurement form (page 50, 52, or 53) if these need to be supplied with the gate.

The ANSI requirements for gates or movable barrier devices are located in 8.6.6 of ANSI B11.1.

8.6.6 Movable Barrier Device

1) A movable barrier device, when used, shall enclose the point of operation before a press cycle (stroke) can be initiated.

2) The device shall prevent the individual from reaching the hazards associated with the point of operation by reaching over, under, around, or through the device when in the closed position.

3) In conjunction with the press control, the device shall actuate the clutch and initiate the press cycle (stroke).

4) The barrier shall be capable of being returned to the open position should it encounter an obstruction prior to enclosing the point of operation.

5) The device shall require opening of the barrier to reset the antirepeat system of the press production system every time the press stops before a successive cycle (stroke) can be initiated.

6) The device shall be in compliance with 6.11 and 8.8.

7) The device shall provide visibility to the point of operation when necessary for safe operation of the press production system.

8) The device in and of itself shall not create a hazard to the operator or others.

8.6.6.1 Type A movable barrier device

1) A type A movable barrier device, when used, shall protect the individuals as specified in 8.6.1 (e).

2) The type A movable barrier device shall, in normal single-cycle operation, be designed to hold in the closed position until the slide has completed its cycle (stroke) and has stopped at top of cycle (stroke).

8.6.6.2 Type B movable barrier device

1) A type B movable barrier device shall protect the individuals as specified in 8.6.1 (f).

2) The device shall not be used on full-revolution-clutch presses.

3) The device shall, in normal, single-stroke operation, be designed to hold in a closed position during the closing portion of the cycle (stroke), or until cessation of slide motion during the closing portion of the cycle (stroke).

4) When the protection of the operator is dependent upon the stopping action of the press, a stopping-performance monitor shall be required in conformance with 6.12.

GATE ASSEMBLIES

Basic Gate Assembly (Without Side or Rear Safeguarding)

GATE CONSTRUCTION

The panel framework of these gates is constructed of 1" x 2" extruded aluminum which slides up and down on roller bearings in a rail extrusion. The panel of the gate is furnished with either clear polycarbonate (3/16"-thick) or an adjustable lower section.

The standard gate assembly is furnished with hinges allowing it to swing open. A button-head cap screw on a locking plate holds the gate in place. This feature is useful when changing dies or working on dies in the machine.

The gate assembly can be furnished with side guards. The gate and side panel can be swung open to the left when changing dies. A dead-bolt latch is located on the right extrusion. When side guards are furnished, this latch releases the gate so it can be swung completely open.

These gates are easily mounted on the bolster of the machine or on a special plate or bracket on the front of the machine.

The gate assemblies listed are designed for a variety of machines, including full-revolution-clutch presses. Side guards are also required when using a gate. Gates are made according to the measurements submitted. Please complete the appropriate measurement form on page 52, 54, or 55 for a complete assembly.

GATE ASSEMBLY COMPONENTS

- Gate frame assembly
- Gate panel
- Proximity switch (24 V DC only) or limit switch
- Air cylinder(s)
- Quick dump valves
- Air flow control valves
- Solenoid air valve assemblies
- 1/8" air regulator gauge and mounting bracket
- Extrusion, hinge assembly, and mounting hardware

PRICING/ORDERING INFORMATION

The following information is required to order or price a gate assembly:

1. Choose a gate lift height of either 12"* or 18"*
2. Provide gate's **outside dimensions** in height and width

OR

Provide gate's **inside opening dimensions** in height and width

*Other lift heights are available. Please complete the measurement form on page 50, 52, or 53.

For full-revolution-clutch presses, part-revolution-clutch presses, or hydraulic presses with a gate interface, please consult the factory.

GATE ASSEMBLY & BARRIER GUARD MEASUREMENT FOR STRAIGHT-SIDE, HYDRAULIC, OR COLUMN-TYPE MACHINES

If more than one machine is to be measured, please make copies of this page.

1 Company _____ Address _____

City _____ State _____ ZIP _____

Attention _____ Rep. _____

Mach. Mfr. & Model No. _____ Mach. No. _____ Measured By _____

Check Type of Machine: ▯ **Straight Side (SSG)** ▯ **Hydraulic (HG)** ▯ **Column (CG)**

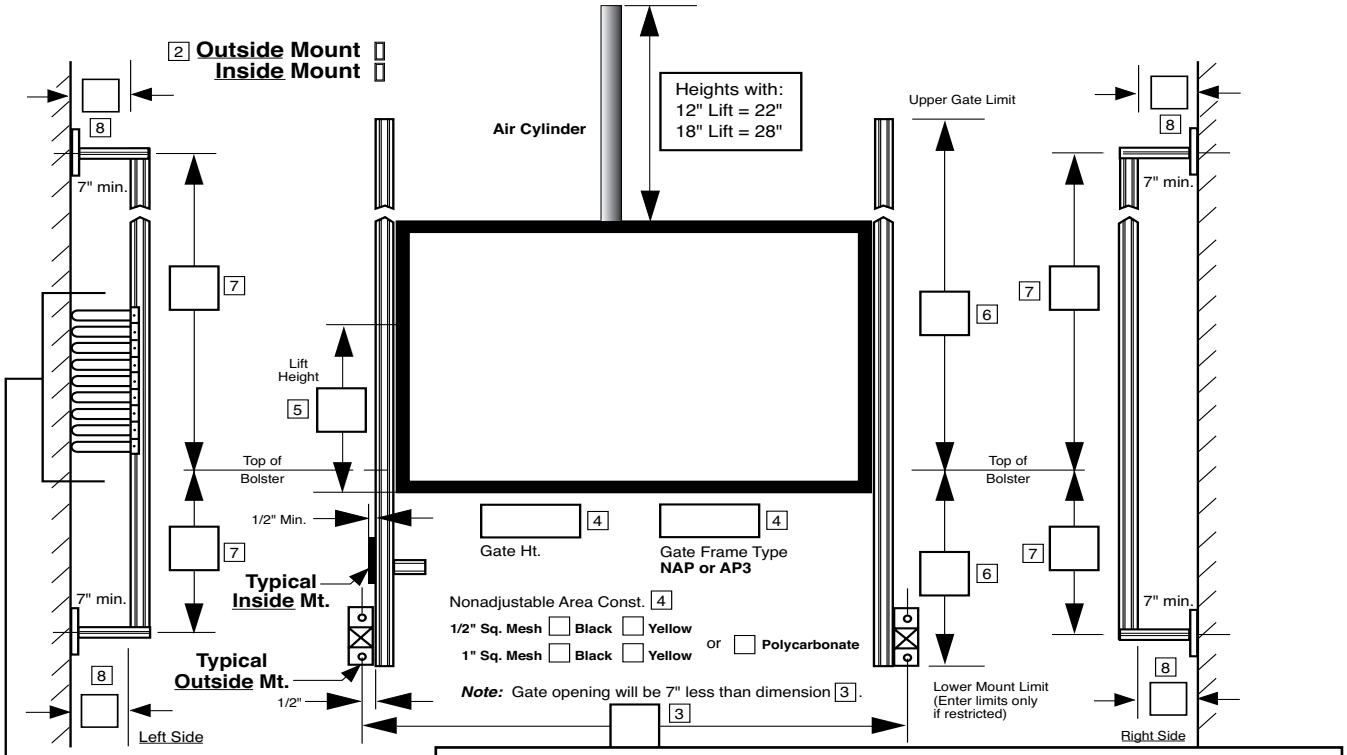

5 GATE LIFT HEIGHT

▯ 12" ▯ 18" ▯ Other _____"

8 MOUNTS: ▯ FMG ▯ EMG

9 SIDE GUARDS

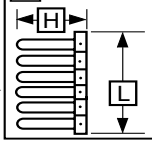

	H	L
Left Side		
Right Side		

10 FLOOR SECTION

Gate	H	L

11 HINGED GATE

▯ No ▯ Yes–Type of Interlock:
▯ Locking ▯ Nonlocking

12 CHOOSE ONE

▯ Proximity Switch (24 V DC only)
▯ Limit Switch

MEASURING INSTRUCTIONS

The gate assembly measurement form is designed to be used for the XL-1SSG, XL-1HG, or the XL-1CG.

1. Fill in the complete heading as indicated.
2. Check whether an **Outside** or **Inside** mount is required. (See lower left side of front view drawing for examples.)
3. Enter center mounting dimension. The gate opening will be approximately 7" smaller than this dimension.
4. Enter gate height, frame type, and construction of nonadjustable area.
5. Enter gate lift height: 12", 18", or other.
6. Enter upper and lower gate mount limits, if any.
7. If outside mounted, enter the appropriate location of upper and lower mounting point for each mount.
8. Enter the desired length and type of mount supports; either FMG for direct or EMG for extended. Allow for any obstructions (7" minimum).
9. Enter dimensions for side guards if required.
10. Indicate if floor section is required for the gate frame. Provide height and length.
11. Indicate if hinged gate is required. If yes, indicate the type of interlock switch required.
12. Choose a proximity switch (for 24 V DC only) or a limit switch.

MEASURING INSTRUCTIONS FOR GATE ASSEMBLY MODELS XL-2G THROUGH XL-6G

The following instructions are for measuring XL-2G through XL-6G gate assemblies and barrier guards. The basic information necessary to quote or fabricate any of the listed gates and barrier guards is the size of the gate, the frame type, nonadjustable area construction, height of panel(s), panel segments (if required), and mounts to attach the gate and guards to the machine. **The length of all panels will be determined by Rockford Systems.**

The following instructions are purposely kept as simple as possible to avoid long explanations of the many variations available.

1. Fill in the complete heading as indicated.

2. Check appropriate gate model number.
   XL-2G = 2 panel and gate
   XL-3G = 3 panel and gate
   XL-4G = 4 panel and gate
   XL-5G = 5 panel and gate
   XL-6G = 6 panel and gate

(If any panels are not required, cross them out in the panel chart.)

3. Measure and record the bolster width and depth.

4. Measure web width of frame, if the barrier guard is to be mounted to the front of the frame behind the bolster plate.

5. Measure and record the distance from the mounting point of the guard on the frame of the machine to the rear of the bolster. Measure and record the outside width of the press frame behind the bolster plate.

6. Indicate desired position of L and R panels and gate relative to the bolster. Drawing shows panels and gate outbound of the bolster. If panels or gate should be inbound, enter minus (-) dimensions, or on the bolster, enter zero.

7. Enter the minimum and maximum feedline heights. Enter distance from the bottom of the gate to bolster (usually 0 inches). If below bolster, enter inches.

8. Measure and record the clearance from the flywheel cover or obstruction to the top of the bolster. This dimension could affect the panel height if the panel is to be swung underneath. Indicate if view is from left or right side of the machine.

   When measuring, be sure the gate will lift completely without hitting any obstruction.

9. Measure and record the feedline depth.

10. Indicate the gate lift height required, normally 12" or 18" is sufficient.

11. Indicate mounts required for **LR, L, R**, or **RR** panels.

SFM	Side Frame Mount
SFM-7	Side Frame Mount (3", 5", or 7")
SFM-24	Side Frame Mount up to 24"
FFM	Front Frame Mount

Note: The panel will begin approximately 2½" from the mounting point with the SFM, SFM-7, or SFM-24 mount. The panel will begin approximately 1" from the mounting point with the FFM mount.

12. Indicate frame type for each panel and gate.

NAP	Nonadjustable Panel
AP1	Adjustable Panel (1/2 frame)
AP2	Adjustable Panel (5/8 frame)
AP3	Adjustable Panel (3/4 frame)
AP4	Adjustable Panel (Center—Full frame)
AP5	Adjustable Panel (Lower—Full frame)
API	Adjustable Panel (Inclinable)

   The gate can ONLY be NAP or AP3.

13. Indicate the construction of the nonadjustable area for each panel.

B	1/2" Sq. Black Mesh (16 gauge)
B1	1" Sq. Black Mesh (12 gauge)
Y	1/2" Sq. Yellow Mesh (16 gauge)
Y1	1" Sq. Yellow Mesh (12 gauge)
PC	Polycarbonate (3/16" thick)

   The gate is normally polycarbonate.

14. Indicate height of each panel.

15. Indicate length of each panel. **Rockford Systems will determine length(s) based on other dimensions provided.**

16. Indicate panel segment type, height, length, and if hinged or nonhinged, if required.

FS	Feeder Segment
AS	Adjustable Segment
PCS	Polycarbonate Segment
ES	Empty Segment

17. Indicate if **L, LF, Gate, RF,** or **R** panels require an interlock switch and choose locking or nonlocking.

18. Indicate if **L, LF, Gate, RF,** or **R** panel needs to be hinged (L or R).

   The gate ALWAYS hinges left.

19. Indicate if hairpins are required in place of **LR** or **RR** panel. The number of hairpins supplied will be determined by the height of the **L** or **R** panel. Indicate the height of hairpins required in the box.

20. Indicate if roof section(s) are required. Provide height and length.

21. Indicate if floor section(s) are required. Provide height and length.

22. Choose proximity switch (for 24 V DC only) or limit switch.

ROCKFORD SYSTEMS, LLC

GATE ASSEMBLY & BARRIER GUARD MEASUREMENT FORM—GAP OR C-FRAME MACHINES

GATE ASSEMBLY WITH MULTI-PANEL GUARDS—XL-2G, XL-3G, XL-4G, XL-5G, XL-6G

If more than one machine is to be measured, please make copies of this page.

(See previous page for instructions.)

[1] Company _____ Address _____

City _____ State _____ ZIP _____

Attention _____ Rep. _____

Mach. Mfr. & Model No. _____ Mach. No. _____ Measured By _____

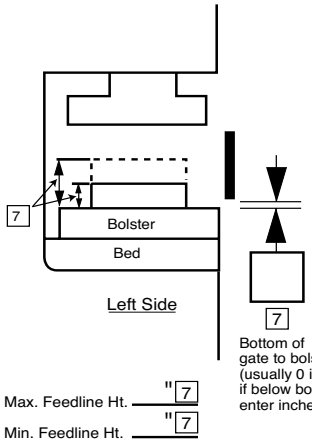

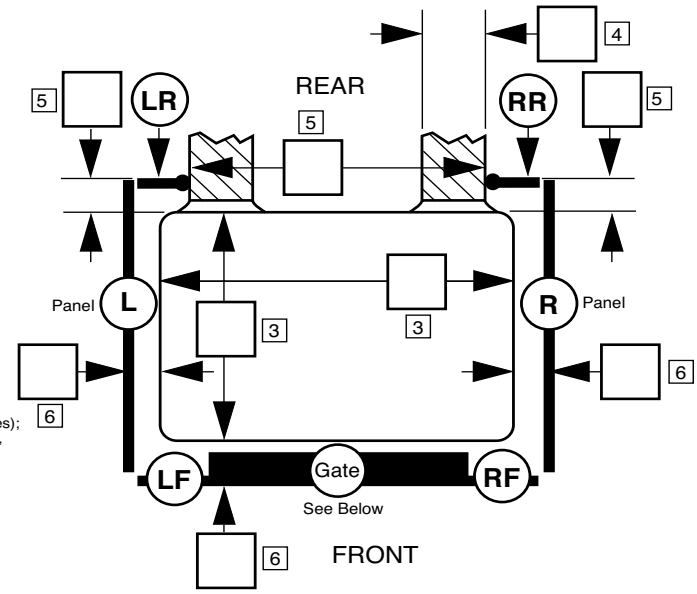

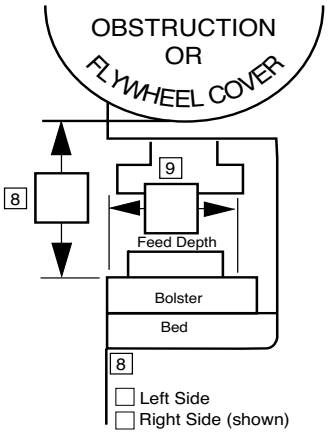

Notes:

2 MODEL	
☐ XL-2G	☐ XL-3G
☐ XL-4G	☐ XL-5G
☐ XL-6G	

10 GATE LIFT HEIGHT	
☐ 12"	☐ Other
☐ 18"	____"

11 MOUNTS	
☐ SFM	☐ SFM-3, -5, -7 (Circle one)
☐ SFM-24	☐ FFM

17 ELEC. INTERLOCK	
☐ Locking	☐ Nonlocking

22 CHOOSE ONE
☐ Proximity Switch (24 V DC only)
☐ Limit Switch

PANEL CHART

Panel	LR	L	LF	Gate	RF	R	RR
Frame Type NAP, AP1, AP2, AP3, AP4, AP5, API	12	12	12	12	12	12	12
Nonadjust. Area Const. B, B1, Y, Y1, PC	13	13	13	13	13	13	13
H (Height)	14	14	14	14	14	14	14
L (Length) RSI To Complete	15	15	15	15	15	15	15
Panel Segment Type FS, AS, PCS, ES	16	16	16		16	16	16
H (Height)							
L (Length)							
H (Hinged) NH (Nonhinged)							
Electrical Interlock Y (Yes) N (No)		17	17	Y	17	17	
Hinged L or R		18	18	L	18	18	
Hairpins (In place of LR or RR)	19						19

20 **ROOF SECTION**

	Panel	H	L
*	L		
	LF		
	Gate		
	RF		
*	R		

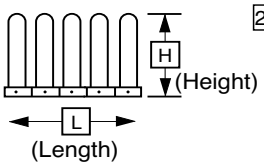

21 **FLOOR SECTION**

Panel	H	L
L		
LF		
Gate		
RF		
R		

Indicate in the Notes section above if a vertical section of hairpins is required above the L or R panel.

SWING-AWAY GATE ASSEMBLY & BARRIER GUARD MEASUREMENT FOR STRAIGHT-SIDE, HYDRAULIC, OR COLUMN-TYPE MACHINES

If more than one machine is to be measured, please make copies of this page.

1 Company _____ Address _____

City _____ State _____ ZIP _____

Attention _____ Rep. _____

Mach. Mfr. & Model No. _____ Mach. No. _____ Measured By _____

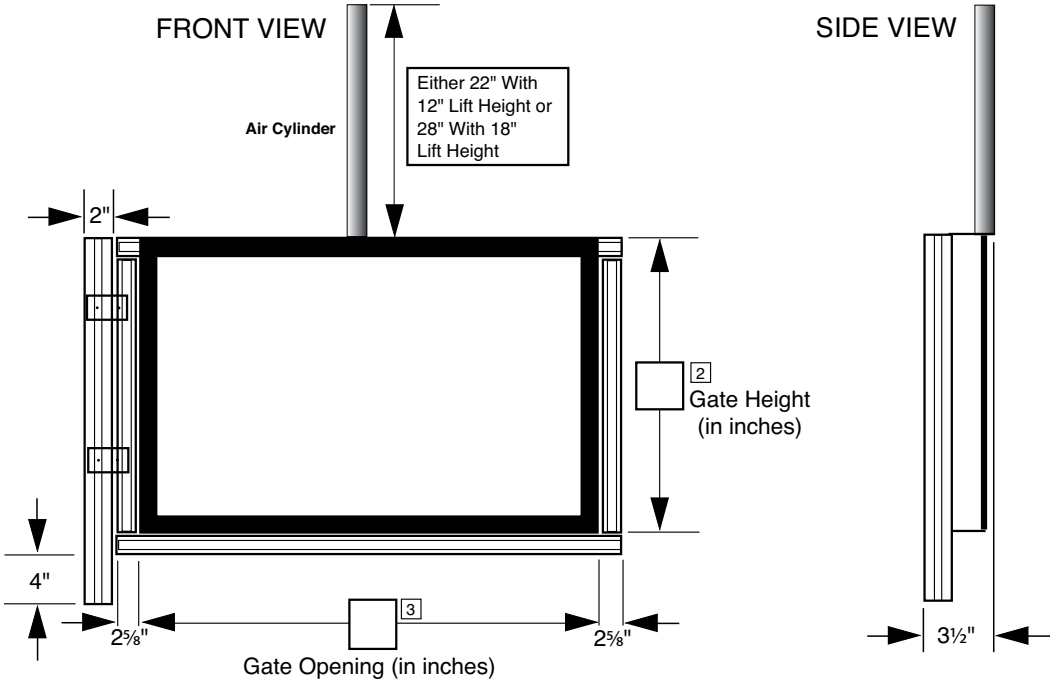

INSTRUCTIONS

1. Provide complete information.
2. Determine gate height required.
3. Determine gate opening required.
4. Determine gate lift height required.
5. Choose gate panel construction required.
6. Choose proximity switch or limit switch.
7. Choose type of interlock switch.

GATE ASSEMBLY COMPONENTS

Gate frame assembly
Gate panel
Proximity switch (24 V DC only) or limit switch
Air cylinder(s)
Air flow control valves
Quick dump valves
Solenoid air valve assemblies
⅛" air regulator gauge and mounting bracket
Extrusion, hinge assembly, and mounting hardware

4 GATE LIFT HEIGHT

☐ 12" ☐ 18" ☐ Other _____"

5 GATE PANEL CONSTRUCTION

Check box 1 or 2 below:

1. ☐ NAP (Nonadjustable Panel)—Choose from the following:

Nonadjustable Area
☐ Polycarbonate **OR**
☐ Wire Mesh
☐ ½" Square **or** ☐ 1" Square
☐ Black **or** ☐ Yellow

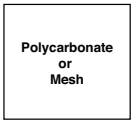

Gate Panel

2. ☐ AP3 (Adjustable Panel)—Choose from the following:

Nonadjustable Area
☐ Polycarbonate **OR**
☐ Wire Mesh
☐ ½" Square **or** ☐ 1" Square
☐ Black **or** ☐ Yellow

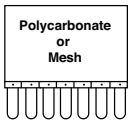

Gate Panel

Adjustable Area—Hairpin will be 4" maximum.

6 ☐ Proximity Switch (24 V DC only) ☐ Limit Switch

7 ☐ Locking Interlock ☐ Nonlocking Interlock

SAFETY BUMPER

TYPICAL APPLICATIONS

- Automated manufacturing
- Packaging and material handling
- Moving conveyor systems
- Moving platforms and lifts
- Automated guided vehicles

Has excellent side activation properties!

This safety bumper system is designed to protect someone or something from hazardous machine conditions. A safety bumper and a safety interface control provides a Category 3 safety system. The safety bumper is an industrial grade, pressure-sensitive safety device with a built-in sensor, and is supplied with wiring. When a person or object comes in contact with the safety bumper, a signal is sent to stop the machine. Each safety bumper has two 6' cables, an aluminum mounting channel, and is resistant to water, oil, hydraulic fluids, and coolants.

An RKR-164 interface control consists of a safety controller, power supply, force-guided relays, terminals, and fuses all inside an enclosure. An on/off selector switch and a lighted reset push button are on the front of the enclosure. If the safety bumper is pressed and stops machine motion, then the reset button must be pushed to allow a restart of the machine. Connection of the safety bumper and interface provides a Category 3 safety system when properly integrated with the existing control system.

If an RKR-164 interface is not required, a DIN-rail mounted safety relay control module (RKR-139) is available. Each 24-V DC DIN-rail module has 4 NO dry contacts and can be mounted into an existing control.

RKR-164 Interface Control

RFT-139 Safety Relay Control Module

ORDERING INFORMATION	
PART NO.	**DESCRIPTION**
BMP-1	1' Safety Bumper
BMP-2	2' Safety Bumper
BMP-3	3' Safety Bumper
BMP-4	4' Safety Bumper
BMP-5	5' Safety Bumper
BMP-6	6' Safety Bumper
RKR-164	Interface Control
RFT-139	DIN-Rail Mounted Safety Relay Control Module

PRESSURE-SENSITIVE SAFETY MATS

Safety mats are intended to be used as auxiliary or additional safeguarding equipment to protect operators and other employees in the machine area. They must not be used as the primary method of safeguarding except when all other means are not applicable.

These mats can safeguard many types of machines. Consider the following when choosing mats:

1) How is the mat to be interfaced to the existing motor control or equipment? Does a new control or starter need to be added?
2) Can the motion of the machine that is creating the point-of-operation hazard be stopped quickly? If it can, what kind of clutch and brake arrangement does it have? Is the machine hydraulically or pneumatically operated? Is it operated by any other means?

Before applying a safety mat to any machine, make sure it will be interfaced correctly with the machine control and make sure it does not interfere with productivity. The whole machine system must be considered, including safeguarding, machine control, disconnects, starters, covers for rotating parts, auxiliary parts, feeding and retrieving of workpieces, etc.

The pressure-sensitive, heavy-duty safety mats described on these pages are highly resistant to wear, oils, grease, acids and most common chemicals.

These mats function in two different ways. One way is that the machine will not start if someone or some object is on the mat. Another way is that if the machine is already operating or cycling, it will stop if someone steps onto the mat. In this case, the machine needs to be restarted once the mat has been cleared.

The mat(s) must be located so an operator or other employee, when stepping onto the mat, cannot reach into the point-of-operation hazard prior to the machine's hazardous motion coming to a stop. See ANSI/RIA R15.06 robot safety standard for detailed guidelines on mat safety distance. Also see the ANSI B11.19 for guidelines on mat control system reliability.

MATS CAN BE APPLIED TO MANY DIFFERENT MACHINES AND AUXILIARY EQUIPMENT FOR PROTECTION.

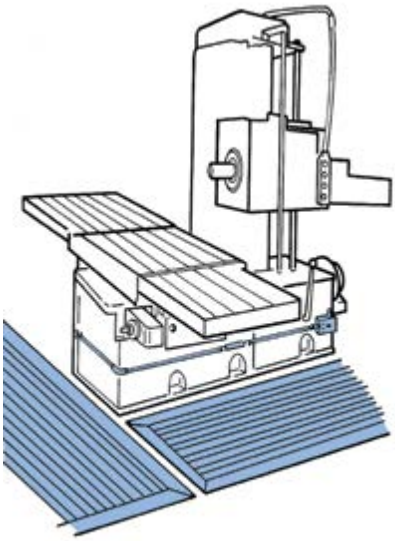

Drilling, Milling, and Boring Machines

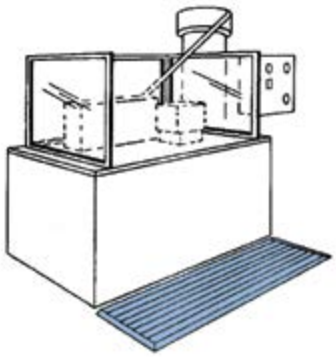

Assembly Machines

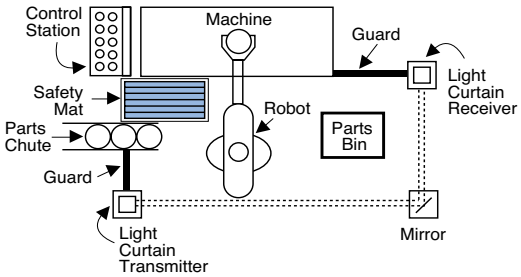

Robots and Auxiliary Equipment

PRESSURE-SENSITIVE SAFETY MATS (CONTINUED)

The heavy-duty pressure-sensitive safety mats offered have been successfully used to provide auxiliary safeguarding for the hazard areas that exist in many industrial environments. Some of these include:

- Robotic welding
- Laser welding/cutting
- Water jet machines
- Pick-and-place robots
- Plastics molding machines
- Assembly machines
- Automated material handling
- Packaging machinery
- Textile machinery
- Conveyors
- Paper converting machinery
- CNC punches and tube benders

The single-piece molded construction of these safety mats means these mats will not delaminate. The mats encase conductive plates which provide stop/restart signals when pressure is applied or released. Each mat top surface has a rib pattern running parallel with the mat length which helps prevent slipping, yet is easy to clean.

All mats are supplied with a 20' single-jacketed, four-wire cord exiting from the width end of the mat. The outside edge of each mat has a lip to attach either an aluminum ramp or a blunt edge. The lip can also be removed when joining two mats with a mat connector. The mat dimensions provided are for the active area of the mat.

These mats can be supplied individually or in multiple configurations. They are available in various sizes and can be tied together (electrically) in series.

The part numbers listed in the chart on the next page do not include any ramps, blunt edges, or connectors. Follow the instructions below the chart to add ramp edging.

Note: A mat control box Part No. RKR-162, or Zone Monitor Part No. RKR-103 or RKR-107 must be used with the mats. *See pages 58-59.*

MAT SPECIFICATIONS

Operating Temperature ..... -35° to 120°F
..... (-37° to 49°C)
Individual Mat Sizes ..... 12" x 12" to 48" x 72"
Activation Force ..... 3 to 5 ft/lb (normal foot traffic)
Mat Cover Material ..... Molded vinyl
Shore A Hardness ..... 72 ± 2
Mat Cable Length ..... 20 ft
Load Capacity ..... 3,000 psi
Applicable Standards.... Designed to meet or exceed ANSI B11.19,
..... OSHA 1910.212, and ANSI/RIA R15.06

ELECTRODE ASSEMBLY:

- Normally open switch
- High-durability 24-gauge steel
- 18-gauge, 4-wire, single-jacketed lead wires and optional application-specific wiring options
- Hermetically encapsulated switch and lead wires
- Designed to meet IP67 and NEMA 6
- Water-tight and totally submersible

For a complete chemical resistance chart, contact the factory.

STANDARD MATS

These heavy-duty pressure-sensitive safety mats are constructed of molded vinyl material. The molding encases two separated parallel steel plates. These plates make contact when the mat is stepped on. They have a black, ribbed pattern top surface to help prevent slipping and are easy to clean.

The mats are active over the entire surface, except the narrow border. They are designed for low-voltage (24-V DC) control circuits.

All standard size safety mats can be modified, i.e., with notches, cutouts, angles, or holes. Various configured layouts of any dimension can be supplied. Various colors, sizes, and shapes of mats are available along with different wiring options to meet your requirements. To obtain a proposal to meet your needs, submit a layout drawing complete with all dimensions and a list of your specific requirements.

Part No. PSM-2436-1
Safety Mat (Includes EDG-1000 Series Ramp Edging)

The pressure-sensitive safety mat information in the chart is for mats without EDG-1000 Series ramp edging. To include mitered ramp edging on all four sides of the mat, add a -1 to the part number and add 4” to both the width and length provided in the chart.

All mats are furnished with a 20’ four-wire cord that exits the mat at the width end.

STANDARD MAT SIZES		
PRESSURE-SENSITIVE MATS CHART		
PART NO.	**WIDTH**	**LENGTH**
PSM-1212	12”	12”
PSM-1224	12”	24”
PSM-1236	12”	36”
PSM-1248	12”	48”
PSM-1260	12”	60”
PSM-1272	12”	72”
PSM-1636	16”	36”
PSM-1824	18”	24”
PSM-1836	18”	26”
PSM-1848	18”	48”
PSM-1860	18”	60”
PSM-1872	18”	72”
PSM-2420	24”	20”
PSM-2424	24”	24”
PSM-2430	24”	30”
PSM-2436	24”	36”
PSM-2442	24”	42”
PSM-2448	24”	48”
PSM-2456	24”	56”
PSM-2460	24”	60”
PSM-2472	24”	72”
PSM-2828	27-1/2”	27-1/2”
PSM-2833	27-1/2”	32-1/2”
PSM-2843	27-1/2”	43”
PSM-2856	27-1/2”	56”
PSM-3030	30”	30”
PSM-3036	30”	36”
PSM-3042	30”	42”
PSM-3048	30”	48”
PSM-3060	30”	60”
PSM-3072	30”	72”
PSM-3432	33-1/2”	32”
PSM-3444	33-1/2”	44”
PSM-3456	33-1/2”	56”
PSM-3636	36”	36”
PSM-3642	36”	42”
PSM-3648	36”	48”
PSM-3660	36”	60”
PSM-3672	36”	72”
PSM-4132	40-7/8”	31-3/16”
PSM-4144	40-7/8”	43-3/16”
PSM-4156	40-7/8”	55-3/16”
PSM-4848	48”	48”
PSM-4860	48”	60”
PSM-4872	48”	72”

RAMP EDGING, BLUNT EDGING, AND MAT CONNECTORS

An aluminum ramp-edged mat system can be customized to fit any shape or size area. Custom-made mats can fit most areas and even provide cutouts for machine legs, posts, or other obstructions. Send us a layout drawing with complete dimensions of the area the mats need to cover, and we will provide a proposal for the required mats and accessories.

RAMP EDGING
EDG-1000 SERIES

Surface installations: for easy roll-on of carts, trucks, and walk on.

Part No. EDG-1052-N (2" W x 52" L)

Part No. EDG-1096-N (2" W x 96" L)

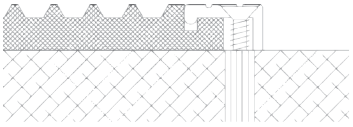

BLUNT EDGING—EDG-2000 SERIES

Recessed installations: for flush edges against thresholds, walls, and machines.

Part No. EDG-2052-N (¾" W x 52" L)
Part No. EDG-2096-N (¾" W x 96" L)

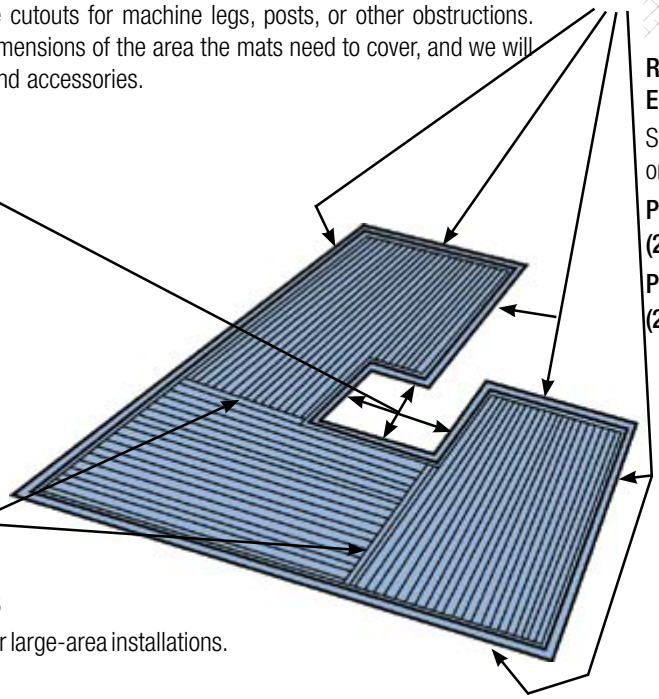

MAT CONNECTORS—CON-1000 SERIES

Joins mats together: permits add-on mats for large-area installations.

Part No. CON-1052-N (52" L)
Part No. CON-1096-N (96" L)

THE MAT EDGE STYLE & MAT MEASUREMENT

The lip edge is the most common and widely used edge style for mats for single mat applications. The lip can be removed to create the square edge for use with the CON-1000 series mat connector.

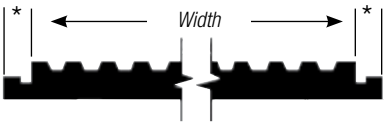

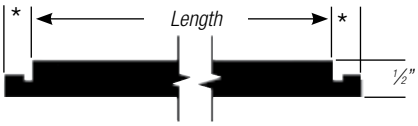

**This dimension is not included in the mat widths and lengths. Do not include this in your measurements.*

MAT CONTROLS

MAT CONTROL BOX—PART NO. RKR-162

This mat control box provides an interface for the safety mats to the existing machine control. If someone steps on the mat while the machine is operating or cycling, the control is designed to provide a stop signal; or, if someone is on the mat(s), the stop signal will not allow the machine to start a cycle. If special applications of this control are required, please consult the factory.

This mat control is furnished in a dust- and oil-tight NEMA 12 enclosure and includes a selectable latch-out feature. When the latch-out feature is turned on, the machine will not automatically be able to restart until the latch-out has been cleared. This is accomplished with the use of the key-operated selector switch. When the latch-out feature is turned off, the machine can be restarted when the mat is cleared.

CONTROL BOX SPECIFICATIONS

Voltage ..... 115 V AC, 60 Hz
Output-Relay Contacts Rating ..... 10 A, 115 V AC Resistive

MAT CONTROLS (CONTINUED)

If the mat control box Part No. RKR-162 is not required, a DIN-rail mounted control module is available. Each control module has 4 NO safety contacts and 1 NC auxiliary contact. The control module allows operation in either automatic or manual reset modes.

ORDERING INFORMATION	
PART NO.	**DESCRIPTION**
RFT-139	120 V AC, 24-V DC Control Module

Part No. RFT-139
This DIN-rail mount control module can be mounted into an existing enclosure.

MAT JUNCTION BOXES

If multiple mats are grouped together to provide auxiliary or perimeter (work-envelope) safeguarding, junction boxes may be required to facilitate the installation.

Use either mat junction box with either the mat control box RKR-162 (previous page) or a DIN-rail mount control module from above. Each mat junction box includes 20' of four-wire cord.

ORDERING INFORMATION	
PART NO.	**DESCRIPTION**
RKR-020	Mat Junction Box to Accommodate From 2-5 Safety Mats
RKR-021	Mat Junction Box to Accommodate From 2-10 Safety Mats

Part No. RKR-021
This mat junction box can provide wiring for up to 10 mats for easy tie-in to the mat control.
(Cover has been removed for photo.)

ZONE MONITOR

For applications where multiple safety mats are needed, a zone monitor can be used. It acts as a control box, while eliminating the need for a junction box for multiple safety mat installations. Additionally, it has a diagnostic feature to determine which mat or mats have been tripped. The zone monitor is available in two models: one which monitors 1-4 safety mats, and another which monitors 1-8 safety mats.

ORDERING INFORMATION	
PART NO.	**DESCRIPTION**
RKR-103	Zone Monitor for 1-4 Safety Mats
RKR-107	Zone Monitor for 1-8 Safety Mats

Zone Monitor

If the diagnostics of an entire perimeter safeguarding system are required, a latch-out/reset zone-control unit may be required. Please consult the factory.

INTRODUCTION

The RKC series Detect-A-Finger® drop-probe devices are used on small machines to protect the operator's fingers from point-of-operation hazards. The aluminum probe is shaped by the user to fit each application. Additional material, such as acrylic or polycarbonate clear plastic pieces or tube-type materials can be added to the probe to provide adequate protection. When doing this, care should be taken not to add too much additional weight to the probe. Light materials should be used.

These devices are designed to drop by gravity. If a finger or workpiece is in the way of the probe and the probe is not allowed to complete its downward travel, the machine will not start a cycle or stroke. The rotary solenoid is in the control box and when energized, after initiation of the cycle, it allows the probe to drop. A spring returns the probe to its starting or up position.

On machines that are mechanically operated, an air cylinder or electric solenoid may have to be added to the operating linkage to trip the machine. On machines that are hydraulically or pneumatically operated, the drop-probe control can usually be interfaced with the existing control system.

When updating machines to meet safety standards, please make sure that each machine is looked at as an individual system that includes, but is not limited to, safeguarding (drop-probe device), machine control, disconnect switch, motor starter, covers for rotating components, auxiliary parts, lockout/tagout equipment, and feeding and retrieving of workpieces.

RKC-000 AND RKC-001 SERIES

FOR SAFEGUARDING RIVETERS, EYELETTERS, STAKERS, STAPLERS, CRIMPERS, FASTENING AND ASSEMBLY MACHINES

Many machines can easily be safeguarded with Detect-A-Finger® drop-probe device.

The RKC series Detect-A-Finger® drop-probe devices are furnished in two models. Part No. RKC-000 is for mounting on the right side of a machine, and Part No. RKC-001 is for mounting on the left side of a machine.

The RKC models consist of a control box with the probe arm, rotary electric solenoid, relay, limit switch, basic circuit with terminals and other mechanical mechanisms.

Two 18" aluminum drop-probe rods are furnished with each control box. These rods are shaped by the user to the workpiece or assembly requirements (see below).

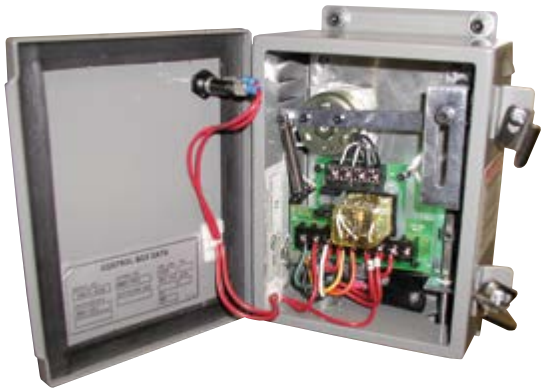

Inside View of RKC-000 and RKC-001 Series Detect-A-Finger® Drop-Probe Device Control Box

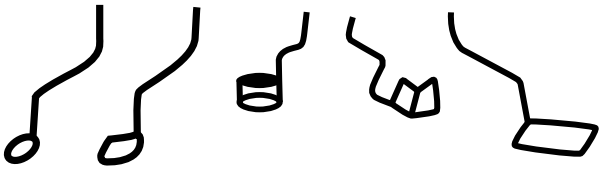

Examples of How the Drop-Probe Rods Can Be Shaped

RKC-000 AND RKC-001 SERIES (CONTINUED)

SEQUENCE OF OPERATION

Select the RKC series Detect-A-Finger® device (right- or left-side mount) that allows the sensing probe to enter the point of operation without obstructing the work area, and provides for as short and rigid of a sensing probe design as possible. The drop probe stroke is adjustable from 0" to 15⁄8". Also, select a foot switch, if needed (see next page).

The operator initiates the cycle of the machine usually by an overt action on the foot switch. This energizes the rotary solenoid in the control box, which allows the drop probe to descend until it makes contact with a limit switch. If an obstruction, such as a finger, gets in the way of the probe, the limit switch is not contacted and the machine does not start its cycle. If nothing obstructs the probe and the limit switch is operated, a relay will signal the machine to start its cycle or cause it to trip. Next, the relay drops out, deenergizing the control box solenoid, allowing the probe to move up and out of the way. At this time, the machine completes its cycle and stops. The foot switch must be released and reinitiated to begin another cycle.

TYPICAL APPLICATIONS

Electrically or Electropneumatically Tripped Machines (Incorporating Mechanical Full-Revolution Clutch Typical on Riveting, Eyeletting and Staking Machines)

Electropneumatic or Electrohydraulic Machines

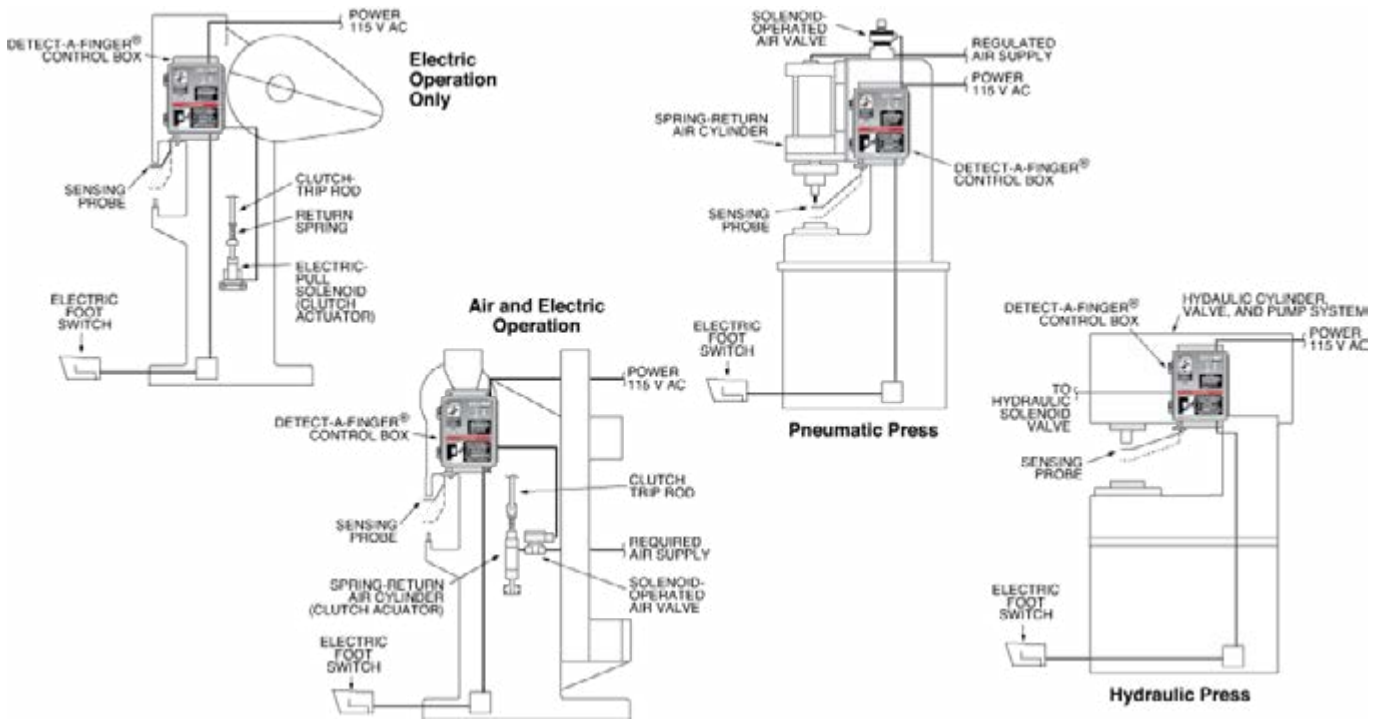

All mechanically operated full-revolution-clutch machines should incorporate single-stroke capability (mechanism).

Refer to the component section on the next page for machines requiring single-stroke packages.

RKC-000 AND RKC-001 SERIES (CONTINUED)

ADDITIONAL COMPONENTS

If the machine that is being safeguarded with an RKC- or DAF-series drop-probe device has single-stroke capability, additional components may be required to trip or cycle the machine.

ADDITIONAL COMPONENTS	
PART NO.	**DESCRIPTION**
RCL-001	50 lb Pull Air Cylinder – 1-1/8" Bore x 1" Stroke
RCL-002	100 lb Pull Air Cylinder – 1-1/2" Bore x 1" Stroke
RCL-003	200 lb Pull Air Cylinder – 2" Bore x 2" Stroke
RCD-140	1/4" Monitored Dual-Solenoid Air Valve Assembly
RCL-043	1/4" Filter-Regulator-Lubricator Assembly
RCD-071	1/4" Air Lockout Valve
CTD-011	Foot Switch – Hinged Flap

Note: For push-type or longer stroke air cylinders, please consult the factory.

SINGLE-STROKE TRIP-CONTROL SYSTEM

If the machine that is being safeguarded with an RKC- or DAF- series drop-probe device obtains its force from a flywheel but does not have a single-stroke mechanism, a component package can be furnished. For best safety practices, choose the control box and component package plus an appropriate sized air cylinder from above.

CONTROL BOX NO. FPF-000-F PLUS	
COMPONENT PACKAGE NO. FNF-011 CONSISTING OF:	
PART NO.	**DESCRIPTION**
RCD-140	1/4" Dual-Solenoid Air Valve
RCL-043	1/4" Filter-Regulator-Lubricator Assembly
CTD-062	Air Pressure Switch
CML-002	Cam and Strap Assembly
CMK-103	Limit Switch Assembly
CTD-011	Foot Switch
HOS-4000	Self-Latching Emergency Stop Palm Button

For fused disconnect switches or magnetic motor starters, please refer to Catalog SFM. Call us toll-free at 1-800-922-7533 or visit our Web site at www.rockfordsystems.com for the latest catalog.

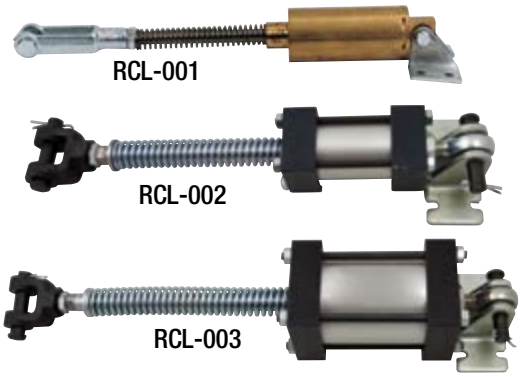
RCL-001
RCL-002
RCL-003

RCD-140

RCL-043

RCD-071

CTD-011

FPF-000-F

CMK-103

CML-002

CTD-062

HOS-4000

RKC-500 SERIES

FOR SAFEGUARDING RESISTANCE-TYPE SPOT WELDERS

The RKC-500 series Detect-A-Finger® drop-probe device reduces accidents at the point of operation where an operator's fingers can enter. The key components of this device are a sensing probe module with the rod shaped to fit over or around the workpiece, and a control module. When the operator initiates a machine cycle, the sensing probe is released and drops by gravity over or around the workpiece. If the operator's fingers are still in the hazard area, the sensing probe will not reach its preset position and will not allow the spot welder to start its cycle. If there are no obstructions to prevent the sensing probe from dropping, when it reaches its preset position, the control unit will allow the machine to cycle.

The compact design of the sensing probe module allows it to be attached to the welder arm. The drop-probe stroke is 15/8".

Rocker-Arm Welder

Air-Operated Welder

TYPICAL APPLICATIONS

Press-Type Resistance Welder

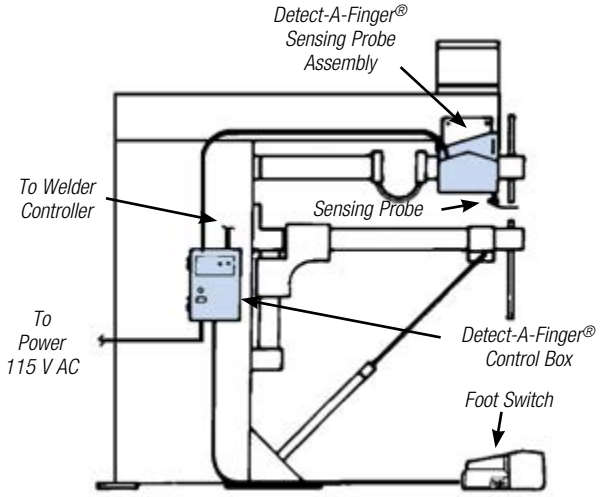

Rocker-Arm-Type Resistance Welder

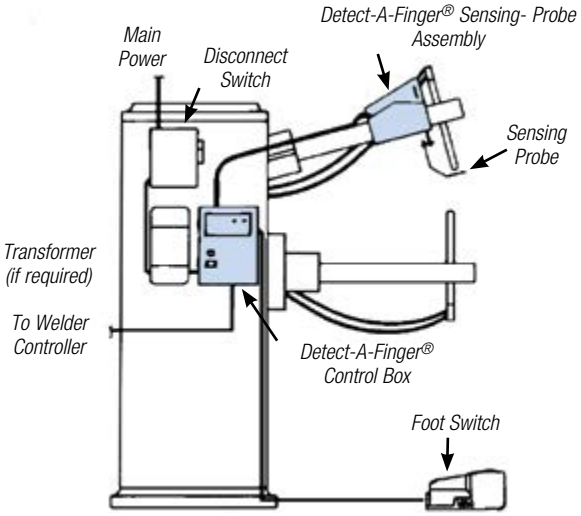

This Detect-A-Finger® drop-probe assembly may be mounted either to the moving member of a welder (upper arm), like the rocker-arm type illustrated above, or may be mounted to a fixed part of a welder, like the press-type illustrated above. Depending on the type of welder, a single-stage or a two-stage foot switch may be required.

The Detect-A-Finger® may also be applied to mechanical foot pedal-type welders. To convert from a mechanical operation, the mechanical pedal must be removed and replaced with an air cylinder to operate the arm and foot switch. The cylinder bore and stroke (push- or pull-type) can be determined from actual machine measurements, and the method and location of attachment to the welder linkage. The air cylinder can be controlled by a three-way normally closed 115-V AC solenoid air valve. Adjustable flow control valves may be employed to smooth the welder arm movement, and an air filter-regulator-lubricator assembly may also be required. See the previous page for these components.

RKC-500 SERIES (CONTINUED)

COMPONENTS

The RKC-500 Detect-A-Finger® device for spot welders consists of two components: the control box (mounted on the frame of the welder) and the drop-probe assembly (mounted on the upper arm).

The control box provides interface of the Detect-A-Finger® device to the spot welder's control system.

In addition to the control box, each unit is furnished with two plain 18" aluminum drop-probe rods. These rods are to be shaped by the user to specific requirements. To prevent welding splash, additional lightweight clear plastic shielding can be attached to the rod. Complete installation instructions and a maintenance manual are provided with each assembly. Insulated mounting hardware for the probe unit is also included.

A single-stage foot switch with a fully guarded top and sides is also available, if required. Foot switch Part No. CTD-011 has a die-cast cover that protects the top and sides, and the front is protected by a hinged flap. These features protect from unintentional operation. (If a two-stage foot switch is required, please consult the factory).

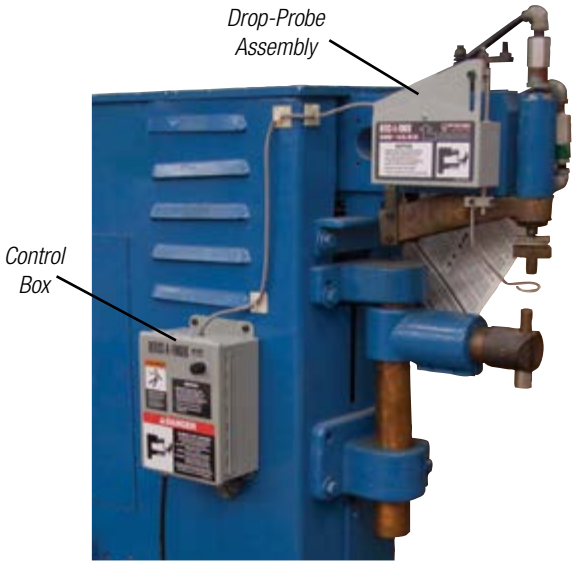

Foot Switch CTD-011

DANGER SIGNS FURNISHED WITH ALL DETECT-A-FINGER UNITS

Operator safety precautions and a danger sign are furnished (in English unless otherwise requested) with each drop-probe device.

Part No. KSC-000 (English)

Part No. KSC-000S (Spanish)

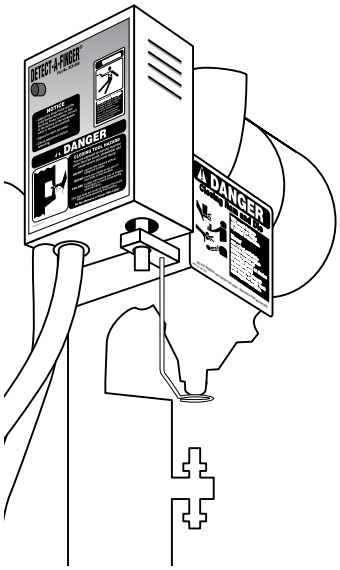

Operator Safety Precautions for Metal Forming Machinery

Size is 81⁄2" x 11". A hole is provided in the upper corner for attaching purposes.

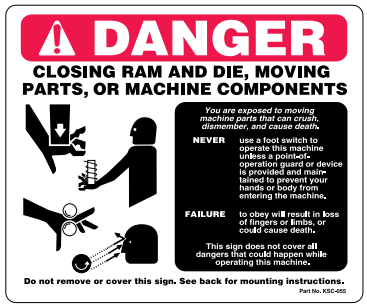

Danger—Closing Ram and Die

Size is 5" x 6" x .055" thick

Part No. KSC-055 (English)

Part No. KSC-055S (Spanish)

DAF-100 SERIES

ADJUSTABLE STROKE DETECT-A-FINGER® DROP-PROBE DEVICE FOR SAFEGUARDING RIVETERS, SPOT WELDERS, EYELETTERS, STAKERS, STAPLERS, CRIMPERS, FASTENING AND ASSEMBLY MACHINES

DAF-100 Detect-A-Finger® Mounted on a Riveting Machine

The DAF-100 Detect-A-Finger® drop-probe device is an electric-air system that consists of two main components: the drop-probe assembly and the control box. The standard unit can provide a stroke of up to 4" and can be mounted on the left or right side of the machine. Location of the DAF-100 should be determined by the availability of the mounting surface, the size or shape of the workpiece, and the throat depth of the machine.

The drop-probe assembly functions by allowing the sensing probe to drop around the point-of-operation hazard prior to each intended machine cycle. If the sensing probe encounters the operator's fingers and fails to drop to a preset position, the machine cycle will not be initiated. If there are no obstructions to prevent the sensing probe from dropping, then the control unit will allow the machine to cycle when the sensing probe reaches the preset position.

DAF-100 SERIES (CONTINUED)

COMPONENTS

The DAF-100 system consists of two main components: the drop-probe assembly and the control box. The drop-probe assembly consists of an air cylinder and solenoid operated air valve with an adjustable down stop locking collar, limit switch, magnetic proximity switch, and a PVC insulator block. The control box consists of a control circuit board, safety relays, and pin-type plug-in terminals.

Each DAF-100 system is furnished with one mini air filter, two mini air regulators, 25' of 5⁄32" PVC tubing, 4' of 1" x 2" extruded aluminum for mounting, and two plain 18" aluminum sensing probes. These sensing probes are shaped by the user to the workpiece or assembly requirements. Complete installation instructions and a maintenance manual are provided with each assembly.

ADDITIONAL COMPONENTS

Additional components may be required to trip or cycle the machine that is being safeguarded with the DAF-100 drop-probe device. See page 65 for these additional components.

Inside View of Control Box

Mini Air Filter and Air Regulators

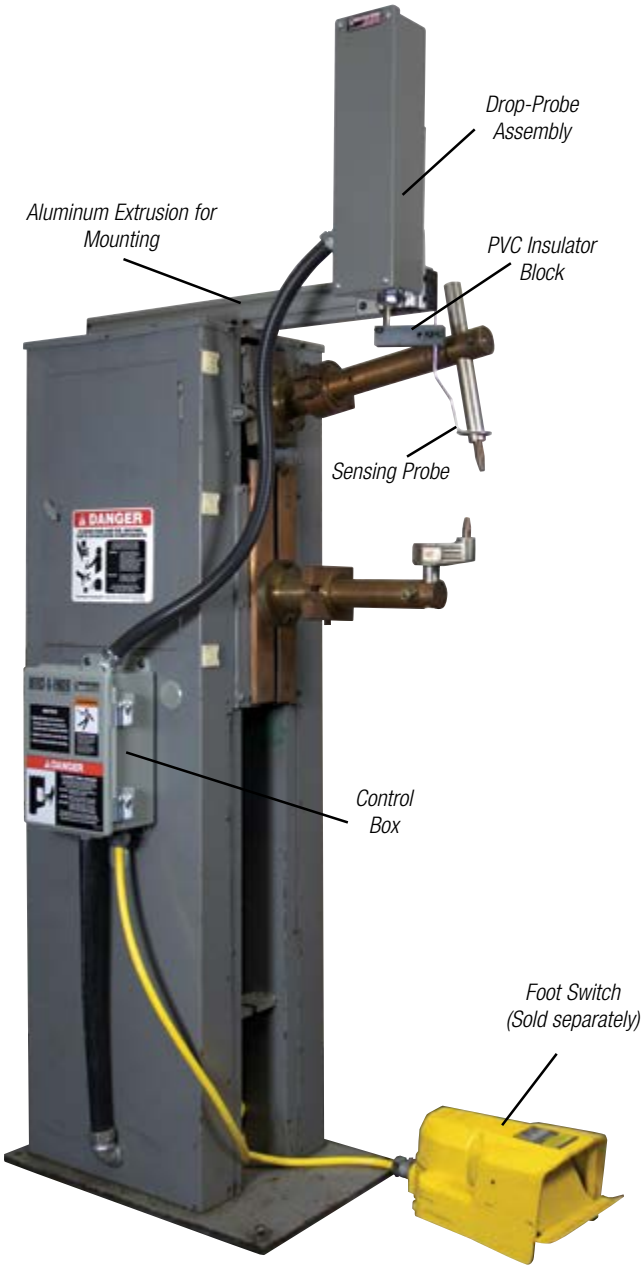

DAF-100 Detect-A-Finger® Mounted on a Spot Welder

Inside View of Drop-Probe Assembly (Cover has been removed for photo)

FUNCTION-TESTING CHECKLIST FOR LIGHT CURTAINS

This is a generic function-testing checklist. Your two-hand control may have other features that require different tests. Please refer to your two-hand control installation manual.

Make sure that the two-hand control has been interfaced properly to the machine's control system to provide control reliability.

DANGER **Never** place your hands or any part of your body in the hazard area while performing these tests.

Always perform these tests at every setup, operator, and shift change, as well as every time after maintenance is performed.

1. Make sure that the light curtain is mounted at the proper safety distance in accordance with the ANSI safety-distance equation. (See the next page for the safety-distance equation.)
2. Verify that someone cannot reach over, under, or around the sensing field of the light curtain to reach the hazard. Additional guards or safeguarding devices, if necessary, must protect these areas.
3. Turn on the machine and the light curtain. The green status-indicator light on the transmitter should be on and the red status-indicator light should be off. If the light curtain has a float-blanking feature, make sure that it is turned off. If fixed blanking is provided and used, this feature can remain on, and the blanked area should be occupied with an object that fills this entire space across the sensing field.
4. Use a test rod or other object sized according to the light curtain's minimum object sensitivity (sometimes referred to as the resolution) to confirm that all the channels in the sensing field are working properly. To do this, move the test rod through the sensing field in a pattern as illustrated to the right. The red status-indicator light on the transmitter should stay on during the entire test.
5. With the machine on and ready to be cycled in a production mode of operation, hold the test rod in the sensing field and attempt to cycle the machine. The machine should not cycle.
6. Cycle the machine and then quickly insert the test rod in the sensing field. The machine should stop immediately.

Note: On some machines, the light curtain is muted during the nonhazardous portion of the machine cycle. If the test rod is inserted in the sensing field while the light curtain is muted, the machine will not stop. Therefore, be sure to insert the test rod during the hazardous portion of the cycle when performing this test.

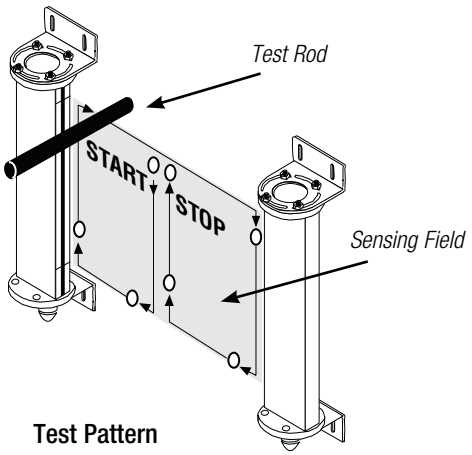

Test Pattern

7. Confirm that when the test rod is removed from the sensing field, the machine does not restart automatically.
8. Verify that in order to start another cycle (or continue a cycle that was interrupted), the normal actuating means must be reinitiated; or, if someone can pass through the sensing field and stand inside the safeguarded area, verify that the light curtain or machine control must be manually reset before reinitiation of the normal actuating means. The reset device must be located outside of the safeguarded area (so it cannot be reached from within) and within view so the operator can verify that no one is inside the safeguarded area.
9. If any of these function tests fail, take corrective action before running production. If all tests pass, remove all keys from the selector switches before running production.

SAFETY DISTANCE FOR LIGHT CURTAINS

The safety-distance equation from Annex D of ANSI B11.19-2010, Performance Criteria for Safeguarding, is as follows:

$$Ds = K(Ts + Tc + Tr + Tspm) + Dpf$$

Where:

Ds	= safety distance
K	= maximum speed that an individual can approach the hazard (63 inches/second is commonly used)
Ts	= stopping time of the machine measured at the final control element
Tc	= reaction time of the control system
Tr	= reaction time of the light curtain and its interface
Tspm	= additional time allowed for the stopping-performance monitor to compensate for variations in normal stopping time
Dpf	= amount of penetration allowed by the light curtain into its sensing field before someone is detected

The value of Dpf can be found using one of the following figures, and it can then be used in the safety-distance equation above.

Figure 1: D_{pf} for light curtains used in a vertical application with object sensitivity less than or equal to 2.5 inches (64 millimeters)

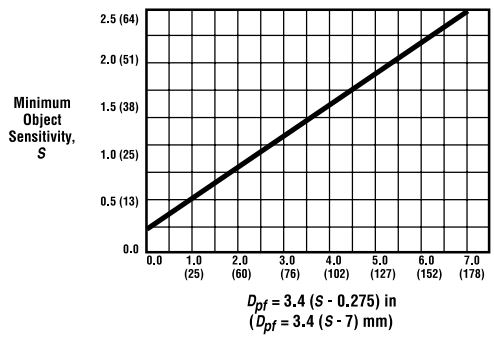

Dpf, the distance added to the safety distance due to the penetration factor, compensates for varying object sensitivities of light curtains.

When blanking features are used and when the blanked area is not completely filled by the workpiece or by mechanical guarding, the object sensitivity can be calculated as follows:

> Object sensitivity = size of the blanked area plus minimum object sensitivity without blanking.

Once this value is found, then determine Dpf.

If the entire blanked area is filled with mechanical guarding or other fixed material or guards, use the light curtain's object sensitivity to determine Dpf.

Figure 2: D_{pf} for light curtains used in a vertical application with object sensitivity greater than 2.5 inches (64 millimeters)

For light curtains using large blanked areas, or if an individual can otherwise reach through or over the sensing field and not be detected, the distance between any two adjacent detection points shall not be greater than 24 in (600 mm), i.e., from one active point to the next active point above.

If the individual cannot reach over the top of the sensing field and the bottom of the sensing field (A) is no more than 12 in (300 mm) above the floor.

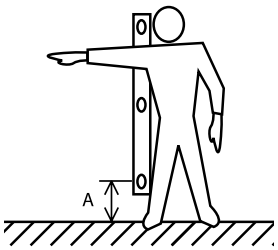

Reach Through
D_{pf} = 36 in (900 mm) for reach-through applications

The top of the sensing field (B) is between 36 and 48 in (900 and 1200 mm) above the floor. The bottom of the sensing field (A) is no more than 12 in (300 mm) above the floor.

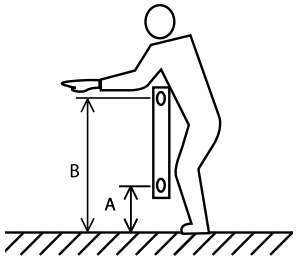

Reach Over
D_{pf} = 48 in (1200 mm) for reach-over applications

Note: Where individuals can place themselves between the safeguarding device and the hazard zone and remain undetected, additional measures must be taken.

Figure 3: D_{pf} for light curtains used in a horizontal application (30° or less) that can be reached over

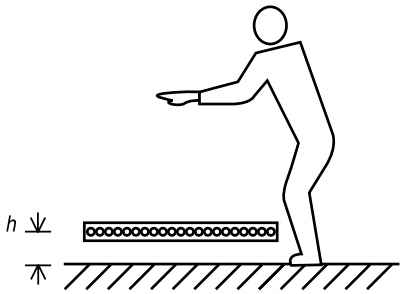

Reach Over
D_{pf} = 48 in (1200 mm) for horizontal sensing-field applications without vertical sensing.

Allowable Sensing-Field Heights in Inches (Millimeters)

Object Sensitivity (*S*)	Mounting Height (*h*) Minimum	Mounting Height (*h*) Maximum
< 2 (50)	0	39 (990)
2.5 (64)	7.5 (190)	39 (990)
3 (76)	15 (380)	39 (990)
3.5 (89)	22.5 (570)	39 (990)
4 (102)	30 (760)	39 (990)
4.25 (108)	33.75 (860)	39 (990)
4.6 (117)	39 (990)	39 (990)

Minimum mounting height (*h*) can also be determined by the following:

$h = 15\ (S - 2)$ in

$h = (S - 50)$ mm

where *S* is the object sensitivity.

Note: The light curtain's horizontal coverage must be enough to hinder an individual from stepping over its sensing field. This minimum distance is 36 in (900 mm) if supplemental safeguarding or physical barriers are used such that an individual cannot step over and clear the sensing field, and 48 in (1200 mm) if no supplemental safeguarding or physical barriers are used.

FUNCTION-TESTING CHECKLIST FOR TWO-HAND CONTROL

This is a generic function-testing checklist. Your two-hand control may have other features that require different tests. Please refer to your two-hand control installation manual.

Make sure that the two-hand control has been interfaced properly to the machine's control system to provide control reliability.

DANGER **Never** place your hands or any part of your body in the hazard area while performing these tests.

Always perform these tests at every setup, operator, and shift change, as well as every time after maintenance is performed.

1. Before turning the machine on, verify that:
   a. The hand controls are protected against unintended or inadvertent operation. This is usually done with ring guards or fabricated shields. (If the hand controls are nonmechanical such as capacitive or optical touch buttons, make sure that only an operator's hands can actuate them and not other parts of his or her body.)
   b. The hand controls are separated by enough distance or configured to require the use of both hands.
   c. The hand controls are fixed in position at the proper safety distance. (See the safety-distance equation below.)
   d. Two individual hand controls are provided for each operator that is to be safeguarded by two-hand control. When there are multiple two-hand control stations, there must be an indicator at each station to indicate whether the station is on or off (usually accomplished with an indicator light), and the means of turning the station on and off must be supervisable (usually done with a key-operated selector switch).
2. With the machine on and ready to be cycled in the single-cycle mode of operation, perform the following tests.
   a. Actuate both hand controls and keep them actuated. The machine should make one complete cycle and then it should stop, even though the hand controls are still being actuated.
   b. Actuate both hand controls and release them while the machine is still in the hazardous portion of its cycle. The machine should stop. Both hand controls must be continuously actuated during the hazardous portion of the cycle.
   c. Actuate both hand controls and release only one control during the hazardous portion of the cycle. The hazardous motion of the machine should stop. Reactuate the hand control that was released. The machine should not finish the cycle. Repeat this with the other hand control. Again, the machine should not finish the cycle. Both hand controls must be released and reactuated before the machine can finish the cycle.

   d. If the two-hand control has a concurrent timer: Actuate one hand control, wait until the concurrent time limit has expired, and then actuate the other hand control. The machine should not cycle. The hand controls must be actuated concurrently within a certain time limit (usually 0.5 seconds or less) before a machine cycle can be initiated.
   e. If the machine is equipped with multiple two-hand control stations, turn off all stations and make sure that the machine does not cycle. Also perform the above tests at each two-hand control station.
3. If any of these function tests fail, take corrective action before running production. If all tests pass, remove all keys from the selector switches before running production.

The safety-distance equation for two-hand control from Annex D of ANSI B11.19-2010, Performance Criteria for Safeguarding, is as follows:

$$Ds = K(Ts + Tc + Tr + Tspm)$$

Where:

Ds	= safety distance
K	= maximum speed that an individual can approach the hazard (63 inches/second is commonly used)
Ts	= stopping time of the machine measured at the final control element
Tc	= reaction time of the control system
Tr	= reaction time of the two-hand control and its interface
Tspm	= additional time allowed for the stopping-performance monitor to compensate for variations in normal stopping time

FUNCTION-TESTING CHECKLIST FOR TWO-HAND TRIP

This is a generic function-testing checklist. Your two-hand control may have other features that require different tests. Please refer to your two-hand control installation manual.

Make sure that the two-hand control has been interfaced properly to the machine's control system to provide control reliability.

DANGER **Never** place your hands or any part of your body in the hazard area while performing these tests.

Always perform these tests at every setup, operator, and shift change, as well as every time after maintenance is performed.

---

1. Before turning the machine on, verify that:
   a. The hand controls are protected against unintended or inadvertent operation. This is usually done with ring guards or fabricated shields. (If the hand controls are nonmechanical such as capacitive or optical touch buttons, make sure that only an operator's hands can actuate them and not other parts of his or her body.)
   b. The hand controls are separated by enough distance or configured to require the use of both hands.
   c. The hand controls are fixed in position at the proper safety distance. (See the safety-distance equations below.)
   d. Two individual hand controls are provided for each operator that is to be safeguarded by two-hand trip. When there are multiple two-hand trip stations, there must be an indicator at each station to indicate whether the station is on or off (usually accomplished with an indicator light), and the means of turning the station on and off must be supervisable (usually done with a key-operated selector switch).
2. With the machine on and ready to be tripped in the single-cycle mode of operation, perform the following tests.
   a. Actuate both hand controls and keep them actuated. The machine should make one complete cycle and then it should stop, even though the hand controls are still being actuated.
   b. If the two-hand trip has a concurrent timer: Actuate one hand control, wait until the concurrent time limit has expired, and then actuate the other hand control. The machine should not cycle. The hand controls must be actuated concurrently within a certain time limit (usually 0.5 seconds or less) before a machine cycle can be initiated.
   c. If the machine is equipped with multiple two-hand trip stations, turn off all stations and make sure that the machine does not cycle. Also perform the above tests at each two-hand trip station.
3. If any of these function tests fail, take corrective action before running production. If all tests pass, remove all keys from the selector switches before running production.

The safety-distance equations for two-hand trip from Annex D of ANSI B11.19-2010, Performance Criteria for Safeguarding, are as follows:

For machines with full-revolution clutches that have one or more clutch-engagement points:

$$Ds = KTmc\ (1/2 + 1/N)$$

Where:

Ds = safety distance

K = maximum speed that an individual can approach the hazard (63 inches/second is commonly used)

Tmc = time it takes to complete a machine cycle

N = number of engagement points on the flywheel

For other machines that are tripped to initiate a cycle that cannot be stopped until the completion of the cycle:

$$Ds = KThm$$

Where:

Ds = safety distance

K = maximum speed that an individual can approach the hazard (63 inches/second is commonly used)

Thm = the time, after initiation of motion, until hazardous motion is completed

OSHA GUARD-OPENING REQUIREMENTS

Table 0-10 details the maximum permissible openings for guards as required by OSHA 29 CFR 1910.217 for mechanical power presses. A guard-opening sign is available that can be used by engineering, maintenance, etc., for reference when designing or fabricating guards. This 10” x 12” sign is made of .055”-thick semi-rigid plastic and can be mounted with nails, screws, nylon lock-strips, etc.

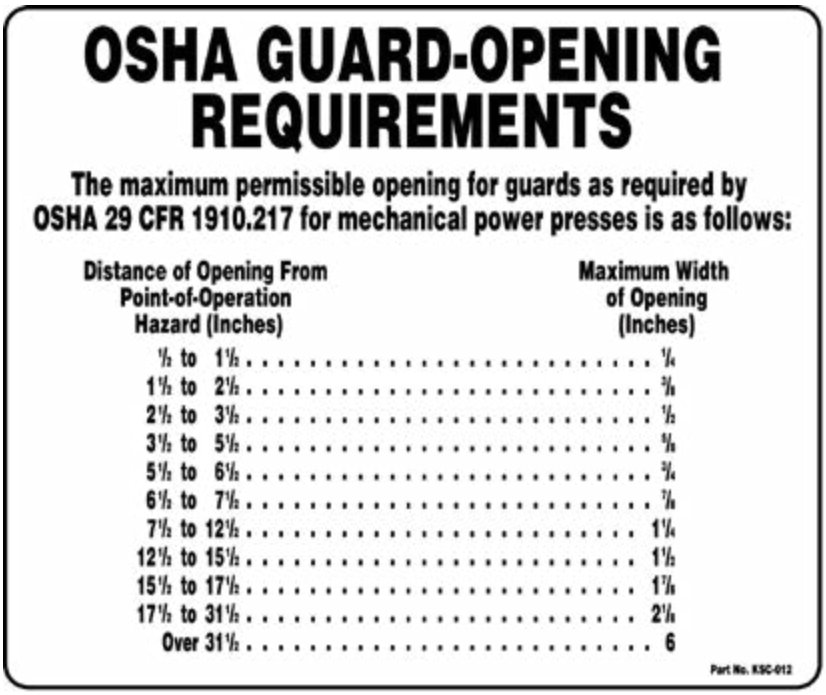

Part No. KSC-012
OSHA Guard-Opening Requirements Sign

ANSI GUARD-OPENING REQUIREMENTS

The maximum permissible opening for guards as required by Annex D of ANSI B11.19-2010, Performance Criteria for Safeguarding, is as follows:

As a function of gap size in millimeters (inches)				As a function of distance in millimeters (inches)			
Known Gap		Minimum Distance		Known Distance		Maximum Gap	
0–6	(0–0.24)	13	(0.5)	< 13	(< 0.5)	Not permitted	
6.1–11	(0.25–0.375)	64	(2.5)	13–63.9	(0.5–2.49)	6	(0.250)
11.1–16	(0.376–0.625)	89	(3.5)	64–88.9	(2.5–3.49)	11	(0.375)
16.1–32	(0.626–1.250)	166	(6.5)	89–165.9	(3.5–6.49)	16	(0.625)
32.1–49	(1.251–1.875)	445	(17.5)	166–444.9	(6.5–17.49)	32	(1.250)
49.1–132	(1.876–5.000)	915	(36.0)	445–914.9	(17.5–35.99)	49	(1.875)
> 132	(> 5.0)	Not permitted		≥ 915	(≥ 36.0)	132	(5.000)

GUARD-OPENING SCALES

An OSHA or ANSI guard-opening scale can be used during the design, installation, and inspection of barrier guards to make sure they comply with the OSHA and ANSI guard-opening requirements. These engraved, acrylic copolymer guard-opening scales are available online at www.rockfordsystems.com.

OSHA GUARD-OPENING SCALE—PART NO. KSC-097

This folding guard-opening scale is based on Table O-10 of OSHA 29 CFR 1910.217 for mechanical power presses, which shows the distances that guards shall be positioned from the point of operation based on opening size. It is constructed of acrylic copolymer and has permanent etched markings.

OSHA Guard-Opening Scale Part No. KSC-097

ANSI GUARD-OPENING SCALE—PART NO. KSC-098

This folding guard-opening scale is based on "A Review of Machine-Guarding Recommendations" by Donald R. Vaillancourt and Stover H. Snook of the Liberty Mutual Research Center for Safety and Health. The ANSI/RIA R15.06 safety standard for industrial robots and robot systems, as well as recently revised ANSI B11–series safety standards for machine tools, use the guard-opening data from this study. The Canadian power press standard, CSA Z142-02, also uses the data from this study. One side of the scale shows English units; the other side shows metric units. It is constructed of acrylic copolymer and has permanent etched markings

ANSI Guard-Opening Scale Part No. KSC-098

SAFETY DISTANCE GUIDE

Many OSHA and ANSI safety requirements must be met before installing two-hand control or a presence-sensing device as a point-of-operation safeguard. One requirement is that the control or device must be located at a minimum safety distance from the point of operation. This safety distance guide slide chart can be used to calculate the safety distance for these devices. The minimum safety distance is based on the stopping ability of the machine and a hand-speed constant, in addition to other factors.

Safety Distance Guide Slide Chart
Part No. LLL-050

TERMS AND CONDITIONS OF SALE

PRICES

A. Prices specified include no federal, state, local, use, occupational, foreign, or other tax. Taxes, if applicable, will be added to the invoice. Unless otherwise stated, all prices are in U.S. dollars.

B. The prices specified include our regular packaging only. Any special packaging requested by the customer, including special protection for export shipment, will be at the customer's expense, and the cost of such special packaging shall be in addition to the prices quoted.

PAYMENT TERMS

Net in 30 days for equipment and net in 10 days for installation, service, and machine surveys (with approved credit). Machine safeguarding seminar fees are due at the time of service. A 1½% monthly service charge (18% a year) will be added to past-due accounts.

CREDIT POLICY

Customers with established credit may purchase for immediate processing of orders.Customers not previously established with us or suitably rated by D&B must apply for open-account status. Orders received without suitable credit information must be prepaid in full before shipment. MasterCard, Visa, and American Express credit cards are accepted.

MINIMUM ORDER

Our minimum order is $25.00. Orders received for less than $25.00 will be subject to a service charge to bring the total to $25.00.

CANCELLATION FEE

Orders that are canceled prior to shipment may be subject to a cancellation fee if the products are nonstock, custom, special, or built to order.

SHIPPING AND HANDLING

Parcels are normally shipped prepaid via our carrier of choice with the charges added to the invoice, but they can also be sent collect or via consignee billing against the customer's account. Truck shipments are normally shipped collect, but they can also be shipped prepaid with the charges added to the invoice via our carrier of choice. A handling charge will be added to all invoices except for customer-pickup orders.

INSURANCE

All shipments are insured for the standard amount provided by the carrier. Additional insurance may be purchased at the customer's expense.

RISK OF LOSS

Unless otherwise agreed upon, all equipment will be shipped FOB shipping point. Title and risk of loss will pass to the customer upon delivery to the carrier at the point of shipment. Transportation will be at the customer's risk and expense, and any claim for loss or damage in transit must be made directly against the carrier.

RETURNED MERCHANDISE

Returned merchandise must be authorized by Rockford Systems in advance, at which time an RMA (return materials authorization) number will be issued. No returned merchandise will be accepted unless accompanied by an RMA number and this RMA number plainly identified on the outside of the shipping container. Material returned without this RMA number will be refused by our receiving department. All returned shipments must be prepaid. The minimum restocking charge will be 25% for any material not found to be defective. Such merchandise must be in original condition and unused in order to qualify for credit. Custom, special, or built-toorder items may not qualify for any credit; however, they may be returned for modification, if needed, which may be at an additional cost. No returns for credit will be considered more than 30 days from the date of shipment.

LIMITED WARRANTY

Rockford Systems, LLC, warrants that this product will be free from defects in material and workmanship for a period of 12 months from the date of shipment thereof. ROCKFORD SYSTEMS LLC'S OBLIGATION UNDER THIS WARRANTY IS EXPRESSLY AND EXCLUSIVELY LIMITED to, at the sole discretion of Rockford Systems, LLC, providing a refund or credit for the amount paid for such Product or repairing or replacing such products, in each case solely for Products which are returned to it within the warranty period with shipping charges prepaid and which are found by Rockford Systems, LLC to be defective upon examination. This warranty will not apply to products damaged in natural disasters, including, but not limited to, earthquakes, fires and floods, or any product which will have been subject to misuse, negligence, accident, restriction, or use not in accordance with Rockford Systems, LLC's instructions or which will have been altered or repaired by persons other than the authorized agent or employees of Rockford Systems, LLC. Rockford Systems, LLC's warranties as to any component part is expressly limited to that of the manufacturer of the component part. This warranty only extends to the original Customer and cannot be transferred or assigned.

DISCLAIMER

THE FOREGOING WARRANTY IS MADE IN LIEU OF ALL OTHER WARRANTIES, EXPRESSED OR IMPLIED, AND OF ALL OTHER LIABILITIES AND OBLIGATIONS ON THE PART OF ROCKFORD SYSTEMS, LLC, INCLUDING ANY LIABILITY FOR NEGLIGENCE, STRICT LIABILITY, OR OTHERWISE, AND ANY IMPLIED WARRANTY OF MERCHANTABILITY OR FITNESS FOR A PARTICULAR PURPOSE IS EXPRESSLY DISCLAIMED. PRODUCTS ARE SOLD BUSINESS TO BUSINESS AND NOT TO CONSUMERS, RENDERING ANY CONSUMER LAW INAPPLICABLE. THE FOREGOING WARRANTY CONTAINS AND REPRESENTS THE ONLY WARRANTY EXTENDED BY ROCKFORD SYSTEMS, LLC FOR THE PRODUCTS. NO EMPLOYEE OR AGENT OF ROCKFORD SYSTEMS, LLC IS AUTHORIZED TO MAKE AVAILABLE TO CUSTOMER ANY OFTHER WARRANTY IN ADDITION TO THE FOREGOING WARRANTY.

LIMITATION OF LIABILITY

UNDER NO CIRCUMSTANCES, INCLUDING ANY CLAIM OF NEGLIGENCE, STRICT LIABILITY OR OTHERWISE, WILL ROCKFORD SYSTEMS, LLC, BE LIABLE FOR ANY INCIDENTAL, SPECIAL OR CONSEQUENTIAL DAMAGES, OR ANY LOSS OR DAMAGE RESULTING FROM A DEFECT IN THE PRODUCT OF ROCKFORD SYSTEMS, LLC, IN EACH CASE WHETHER INCURRED BY CUSTOMER OR OTHERS DIRECTLY OR INDIRECTLY ARISING FROM THE SALE, HANDLING OR USE OF THE PRODUCTS OR FROM ANY OTHER CAUSE WITH RESPECT TO THE PRODUCTS, WHETHER SUCH CLAIM IS BASED UPON BREACH OF CONTRACT, BREACH OF WARRANTY, STRICT LIABILITY IN TORT, NEGLIGENCE OR ANY OTHER LEGAL THEORY (INCLUDING LOST BUSINESS OPPORTUNITIES BUSINESS INTERRUPTION OR OTHER INJURY OR DAMAGE. IN NO EVENT SHALL ROCKFORD SYSTEM'S LIABILITY WITH REGARD TO THE SALE OF PRODUCT EXCEED THE ORIGINAL PURCHASE PRICE PAID BY CUSTOMER.

GOVERNING LAW

These terms and conditions, and use of this website, shall be governed by and construed in accordance with the laws of the State of Illinois, without reference to principles of conflicts of laws. The rights and obligations of the parties hereunder shall not be governed by the 1980 U.N. Convention on Contracts for the International Sale of Goods. Any provision which is prohibited or unenforceable in any jurisdiction shall, as to such jurisdiction, be ineffective to the extent of such prohibition or unenforceability of such provision in any other jurisdiction.

ROCKFORD SYSTEMS, LLC

Quotes from Past Participants

— The seminar has a lot of information on the safety of presses. Anyone with a press operation needs to attend

— It was what I expected —very informative

— Instructors are very knowledgeable

— I thoroughly enjoyed the seminar and picked up a lot of very valuable information

— Excellent presentation

— Best training I've had in years

— The hands-on experience was great

— This seminar is, perhaps, the most comprehensive coverage that I have heard on this subject. The course is a "must" for anyone involved in machinery guarding or operational set-up

ROCKFORD SYSTEMS' QUALIFICATIONS

For many years Rockford Systems has been educating corporations throughout the world on machine safeguarding. Every year, hundreds of people attend these seminars. Participants come from a variety of areas including manufacturing, distribution, aerospace, insurance, government, and consulting. They include safety directors, plant managers, maintenance and engineering personnel, setup people, safety specialists, loss-control engineers, and safety consultants. Seminar instructors are very knowledgeable and have many years of experience in the machine tool industry.

MACHINE SAFEGUARDING SEMINAR OVERVIEW

According to safety standards, when a machine creates a hazard to operators and other employees in the machine area, it must be safeguarded. Rockford Systems offers a machine safeguarding seminar to teach people in positions of responsibility how to safeguard the point of operation and other machine hazards to meet these safety standards.

This 2½-day seminar explains how to interpret the performance language of both OSHA (Occupational Safety and Health Administration) and ANSI (American National Standards Institute) standards. Specific machine safeguarding situations are also discussed. Another section of the machine safeguarding seminar provides basic safeguarding guidelines for other metalworking machines using the ANSI B11-series safety standards.

Seminars combine classroom discussion with demonstrations of machines under power. Hands-on experience with these machines and visual aids, including slides and videos, are also used. These teaching methods enable the participants to interpret the OSHA and ANSI standards as they relate to their specific machine applications and production requirements.

DAY-TO-DAY OUTLINE OF SAFEGUARDING SEMINAR

Day 1 8:00 a.m. to 5:00 p.m.

- Welcome, Introduction, and Objectives of Seminar
- Brief History of ANSI, OSHA, and NFPA-79
- Risk Reduction
- OSHA 29 CFR 1910.211, Definitions
- OSHA 29 CFR 1910.212, General Requirements for All Machines and Auxiliary Equipment
- OSHA 29 CFR 1910.217 Mechanical Power Presses
- ANSI B11.1-2009 Mechanical Power Presses
- Full-Revolution-Clutch Identification and Control Requirements
- Part-Revolution-Clutch Identification and Control Requirements
- Control Reliability and Brake Monitoring
- Electrical Component Requirements (NFPA-79)
- Hand-Feeding Tools
- Point-Of-Operation Safeguarding—Guards, Devices, Methods
- Design, Construction, Setting, and Feeding of Dies
- Inspection and Maintenance Records
- Instruction to Operators
- Reports of Injuries
- Mechanical Power-Transmission Apparatus (OSHA 1910.219)

Day 2 8:00 a.m. to 5:00 p.m.

- ANSI B11.2 Hydraulic Power Presses
- ANSI B11.3 Power Press Brakes
- ANSI B11.4 Shears
- ANSI B11.5 Iron Workers
- ANSI B11.6 Lathes (Manually Operated)
- ANSI B11.7 Cold Header and Cold Formers
- ANSI B11.8 Drilling, Milling, and Boring Machines
- ANSI B11.9 Grinding Machines
- ANSI B11.10 Metal Sawing Machines
- ANSI B11.11 Gear Cutting Machines
- ANSI B11.12 Roll Forming and Roll Bending Machines
- ANSI B11.13 Automatic Screw/Bar and Chucking Machines
- ANSI B11.14 Coil Slitting Machines/Systems Withdrawn—See ANSI B11.18
- ANSI B11.15 Pipe, Tube, and Shape Bending Machines
- ANSI B11.16 Metal Powder Compacting Presses
- ANSI B11.17 Horizontal Hydraulic Extrusion Presses
- ANSI B11.18 Coil Processing Systems
- ANSI B11.19 Safeguarding Methods (Criteria)
- ANSI B11.20 Integrated Manufacturing (Cells)
- ANSI B11.21 Machine Tools Using Laser Processing (Cutting)
- ANSI B11.22 CNC Turning Centers and Lathes
- ANSI B11.23 Machining Centers—CNC Mills, Drills, Boring
- ANSI B11.24 Transfer Machines
- ANSI/SPI B151.1 Horizontal (Plastic Injection Molding Machines)

Day 2 (Continued)

- BS ISO 14137 and JIS B6360 Electrical Discharge (EDM) Machines
- ANSI B152.1 Hydraulic Die Casting Presses
- ANSI/RIA R15.06–1999 & 2012 Robots and Large Work Envelopes
- OSHA 1910.147 Control of Hazardous Energy Lockout/Tagout

Day 3 8:00 a.m. to 10:00 a.m.

- Machine Demonstrations

SEMINAR MATERIALS

Each person attending this seminar receives a variety of information regarding machine safeguarding which includes reprints of the following:

- OSHA 29 CFR 1910.211, 1910.212, 1910.217, and 1910.219
- Charts and graphs for future reference
- Safeguarding product catalogs
- U.S. Department of Labor memorandums
- Mechanical Power Press Safety Information Card
- Safety Distance Guide Slide Chart
- Folding, Acrylic Copolymer OSHA and ANSI Guard-Opening Scales
- Laminated function-testing checklists for safeguards

SEMINAR REGISTRATION FORM

ROCKFORD SYSTEMS, LLC

☐ 2½-Day "Machine Safeguarding" Seminar **$995.00/person**

Registration for the dates of _____

Company Name _____

Address Line 1 _____

Address Line 2 _____

City _____ State/Province/Region _____ ZIP/Postal Code _____

Phone _____ Ext. _____ Fax _____

E-Mail Address _____

Registrants:

Name _____ Title/Position _____ T-Shirt Size _____

Name _____ Title/Position _____ T-Shirt Size _____

Name _____ Title/Position _____ T-Shirt Size _____

Name/Title of person making registration _____ Phone _____

Payment Options—Fees are payable in advance using any of the following forms of payment:

☐ Check enclosed payable to Rockford Systems, LLC Check amount _____

☐ Invoice company Purchase Order No. _____ Attn: _____

Billing Address:

☐ Bringing check to seminar.

☐ Bringing credit card to seminar. Charge to: ☐ American Express ☐ Visa ☐ MasterCard

Card No. _____ Exp. Date _____

Cardholder's Name _____ Signature _____

Enrollments are limited and are taken on a first-come, first-served basis. Maximum class size is 24 people. Please call, mail, e-mail, or fax us to make your reservation.

By Phone: Call **toll-free** 1-800-922-7533

By Mail: Complete and mail the above form to:

Seminar Registrar
Rockford Systems, LLC.
4629 Hydraulic Rd
Rockford, IL 61109-2695

By E-mail: Complete and send form at our Web site
www.rockfordsystems.com

By Fax: Send copy of completed form to: 815-874-7890

Substitutions may be made at any time. Please notify seminar registrar with any changes.

On-Site Custom Seminars: We can present a shorter version of this seminar at your company. Please call us for details.

A

Adjustable Mirror Mounting Bracket 40

A Gate 47

All-In-One Two-Hand Control 43–44

ANSI Guard-Opening Requirements 71

ANSI Guard-Opening Scale 72

ANSI Publications List 5

B

B Gates 47–48

Brackets, Light Curtain Mounting 33-39

Brackets, Mirror 40–41

Brackets, Tower Light Assembly 32

Bumper, Safety 54

C

Checklists, Function-Testing 67-70

Light Curtains 67–68

Two-Hand Control 69

Two-Hand Trip 70

Controls 20, 24, 26, 32, 42-44, 58-59

All-In-One Two-Hand Control 43–44

Remote Operator-Style Controls 20, 24, 26

Safety Mat Control 58–59

Tower Light Assembly Controls 32

D

Danger Signs 64

Detect-A-Finger® Drop-Probe Devices 60-66

DAF-100 Series 65–66

RKC-000 and RKC-001 Series 60–62

RKC-500 Series 63–64

E

EZ-Screen Light Curtain System, Point-of-Operation 13-20

F

Floor Stands 39, 27-30

Light Curtains 39

S3000 Safety Laser Scanner 28–31

Function-Testing Checklists 67-70

Light Curtains 67–68

Two-Hand Control 69

Two-Hand Trip 70

G

Gate Assemblies 50

Gate (Movable Barrier) Devices 47–53

Guard-Opening Scales 72

I

Interfaces 18, 24, 54

EZ-Screen Light Curtain Interfaces 19

Perimeter Light Beam 24

Safety Bumper 54

L

Laser Alignment Tool 20, 23, 26

Laser Safety Scanner, S3000 27-30

M

Machine Safeguarding Seminars 74-75

Mat Controls 58–59

Mats, Pressure-Sensitive Safety 55–57

Measurment Forms 36-37, 50-53

Gate Assembly 50–52

SAB-A/SAB-NA, Press 36

SAB-A/SAB-NA, Press Brake 37

Mirror Bracket 40–41

Mirrors for Light Curtains 40

Mounting Brackets, Light Curtains 33-39

Mounting Kits, S3000 Safety Laser Scanner 28

N

No-Go Indicator Light 33

O

Optional Mounting Brackets for Point-of-Operation Light Curtain 33

OSHA Guard-Opening Requirements 71

OSHA Guard-Opening Scale 72

P

Part Numbering Charts 17-18, 23, 26, 30, 31, 44

Cascading Light Curtain Presence-Sensing 17–18

Noncascading Light Curtain Presence-Sensing 16

Perimeter Light Beam 23

S3000 Safety Laser Scanner 30

Single Beam 26

Tower Light Assembly 31

Two-Hand Control 44

Perimeter Light Beam System 21–23

P

Point-of-Operation Light Curtain System 13-20

Portable Stop-Time Measurement Device 10–11

Presence-Sensing Devices 6–7

Pressure-Sensitive Safety Mats 55–57

Q

Quick Reference Guide 12

R

References 67–72

Remote Fixed Blanking Switch 16

Remote Operator Stations.....20, 24, 26

S

S3000 Safety Laser Scanner 27–30

SAB-A Mounting Brackets 34–36

SAB-NA Mounting Brackets 34–36

Safeguarding Seminars 74-75

Safety Bumper 54

Safety Distance Chart, Two-Hand Trip 46

Safety Distance Guide 72

Safety Mats 55–57

Seminars 74-75

Single Beam System 25–26

Stationary Brackets 38–39

STM - Stop-TIme Measurement Device 10–11

Swing-Away Mounting Brackets 34–36

T

Test Rods For Light Curtains 33

Tower Light Assemblies 31–32

Two-Hand Control 42–44

Two-Hand Trip 45–46

Type A Gate 47

Type B Gate 47–48

NOTES

NOTES

ROCKFORD SYSTEMS, LLC

4620 Hydraulic Road, Rockford, Illinois 61109 United States
1-800-922-7533 | 815-874-7891
www.rockfordsystems.com

MSD/TR0618